SP 50/25
Undercounter

Type 5064-5066

50 Kg self-contained ice maker
Spray system

KASTEL

SP Series

Solid cube
Spray system

The SP series is the cornerstone of Kastel s professional ice line.
Elegance, solidity, and innovation come together to create full, crystal-clear, compact ice cubes designed to chill for a long time without diluting, yet enhancing every drink.

The horizontal evaporator spray system guarantees pure and transparent cubes, while the natural refrigerant R290 ensures efficiency while being eco-friendly.
Made entirely of stainless steel, the SP Series combines strength, versatility and intelligent control thanks to its new electronics, for a simple and intuitive management.

Fields of application

Hotels	●●●●●○
Restaurants	●●●●●○
Fast Food	●○○○○○
Bars	●●●●●○
Discos	●●●●●○
Fish markets	○○○○○○
Supermarkets	○○○○○○
Medical & SPA	○○○○○○
Industries	○○○○○○

Type of ice

Solid cube 36 g
Ø 42 x 45(H) mm
24 pcs per cycle

Product

Highlights

- Solid gourmet ice cube, compact and crystal-clear
- Solid stainless steel structure
- Disappearing insulated door, for easy and immediate access to the storage bin
- Storage bin insulated with HCFC-free expanded polyurethane foam, for optimal ice preservation
- Easy cleanable internal rounded surfaces
- Natural gas R290 with GWP 3
- RoHS Free
- Electronic management with 6-character LED display, multicoloured on/off button and self-diagnostic system
- Cleaning Cycle: sanitizes the system by recirculating water with a suitable cleaning product, without activating the compressor
- Air or water cooling system
- Tropical-class machine (+43°C), suitable for installation in extreme conditions
- Dual water inlet system with twin solenoid valves for efficient water supply (water cooled model)
- Front ventilation, ideal for reduced spaces (air cooled versions only)
- Front-access air condenser filter, easily removable and cleanable
- Easily accessible tray drain plug and pump filter for fast and simple cleaning
- Easy to access for maintenance

Details

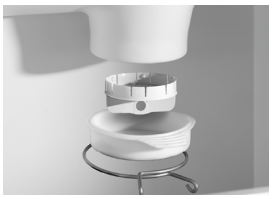

Package contents

N° 1 Inlet hose
N° 1 Inlet hose for cooling (water-cooled versions only)
N° 1 Drain hose
N° 1 Ice scoop
N° 4 H=10 mm feet

Options and installation kits

- Integrated drain pump (DP)
- Star connect Wifi (WIFI)
- Special voltages
- KIT 4 height-adjustable feet (cod. 00016426)
- Water treatment

Certifications

WaterMark

Aristarco S.p.A.
CF/PI/VAT IT01823140262

Via del Lavoro, 30 - 31033
Castelfranco Veneto, TV - Italy

T +39 0423 425611
M info@aristarco.it

www.aristarco.it

SP 50/25
Undercounter

Type 5064-5066

50 Kg self-contained ice maker
Spray system

KASTEL

Operating conditions

	Min.	Max.
Ambient temperature	10 °C / 50 °F	43 °C / 110 °F
Water temperature	5 °C / 41 °F	38 °C / 100 °F
Water hardness	5 °f / 2.8 °d	20 °f / 11,3 °d
Water inlet pressure	1 bar (14 psi)	5 bar (72 psi)
Electrical voltage	-10%	+10%

Performances

Air cooled system

Room temp.	Water temp.	Prod. in 24h
10° C / 50° F	10° C / 50° F	53 kg / 117 lbs
21° C / 70° F	**15° C / 60° F**	**48 Kg / 106 lbs**
32° C / 90° F	21° C / 70° F	42 Kg / 93 lbs

Water cooled system

Room temp.	Water temp.	Prod. in 24h
10° C / 50° F	10° C / 50° F	54 Kg / 119 lbs
21° C / 70° F	**15° C / 60° F**	**51 Kg / 112 lbs**
32° C / 90° F	21° C / 70° F	47 Kg / 104 lbs

Technical features

Dimensions (WxDxH)	500x600x795 mm
Net weight	48 Kg / 106 lbs
Store capacity	25 Kg / 55 lbs
Type of ice	Solid cube
Cooling system	A/W
Type of refrigerant	R 290
Electrical supply	230 V 50 Hz
Compressor (ASHRAE conditions)	921 W
Average power consumption	470 W
Fuse	10 A
Electrical consumption	26,78 kWh/100Kg
Water consumption	A = 4,9 l/h W = 54,7 l/h
Heat rejected	680 W 2.322 BTu/h
Noise level	< 70 dB

All the technical information must be considered at the following conditions:
Dimensions without feet
Standard cube (18 g)
Standard Voltage (50 Hz)
Ambient temperature +32° C
Water temperature +21° C

Logistic

Packing dimensions (WxDxH)	650x550x940 mm 0,34 m3
Gross weight	54 Kg / 119 lbs

Installation diagram

*All dimensions are expressed in mm

Frontal view

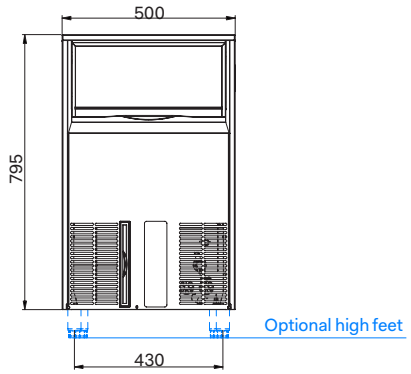

Lateral view

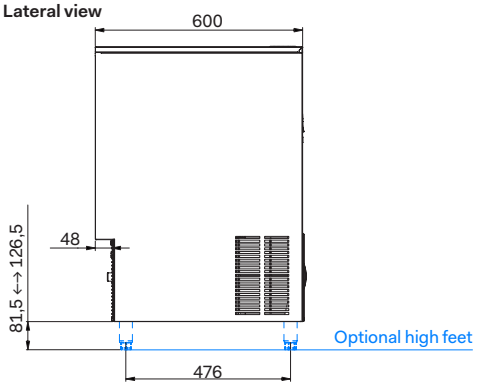

Top view

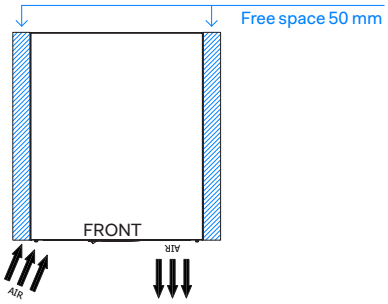

Rear view
(Water and electrical connections)

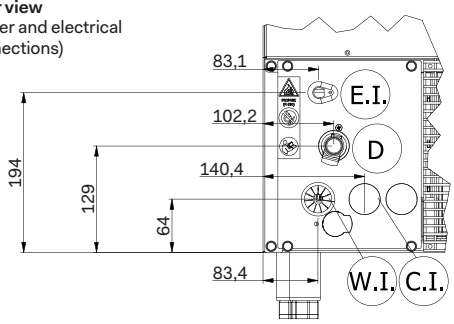

E.I. POWER CABLE
3x1,5 mm2

D DRAIN HOSE
Ø 27 mm L=2 m

W.I. INLET HOSE
3/4" L=2 m

C.I. INLET HOSE FOR COOLING
3/4" L=2 m

Aristarco S.p.A.
CF/PI/VAT IT01823140262

Via del Lavoro, 30 - 31033
Castelfranco Veneto, TV - Italy

T +39 0423 425611
M info@aristarco.it

www.aristarco.it