KASTEL
COOL & CLEAN

CATALOGO PARTI DI RICAMBIO
SPARE PARTS CATALOGUE
CATALOGUE PIECES DETACHEES
ERSATZTEILKATALOG
CATALOGO DE PIEZAS DE RICAMBIO
CATALOGO PEÇAS DE REPOSIÇÃO

MOD. FK 50 M
Dishwasher basket 50x50
Partial double skinned
Electromechanical controls

INFORMAZIONI GENERALI

A. Il catalogo serve per richiedere con esattezza le parti di ricambi, in base al **MODEL** indicato nella matricola della macchina. Negli ordini indicare la posizione, il codice, la descrizione e la quantità delle parti di ricambio;

B. I disegni delle parti di ricambio sono indicativi e NON rappresentano il pezzo reale;

C. I dati contenuti in questo catalogo sono indicativi e possono essere soggetti a modifiche senza preavviso.

GENERAL INFORMATIONS

A. This catalog order exactly the right spare parts, according to the **MODEL** indicated on the identification plate of the machine. When ordering, specify the position, the code, the description and the quantity of spare parts;

B. The spare parts drawings are general and DO NOT represent the real part;

C. The contents of this catalog are general, and can undergo changes without prior notice.

INFORMATIONS GENERALES

A. Ce catalogue est utilisé pour commander exactement les pièces détachèes, selon le **MODEL** indiqué sur la plaque d'identification de la machine. Les commandes doivent indiques la posizition, le code, la description et la quantité des pièces détachèes;

B. Les dessins des pièces détachées sont indicatif, et NE raprésentent pas le pièces concernée;

C. Les données de ce catalogue sont citées seulement à titre indicatif et peuvent être l'objet de modifications sans avis préalalble.

LETTURA DELLA MATRICOLA MACCHINA | **CONSTRUCTION OF MACHINE ID NUMBER** | **LECTURE DONNÉE DE LA MACHINE**

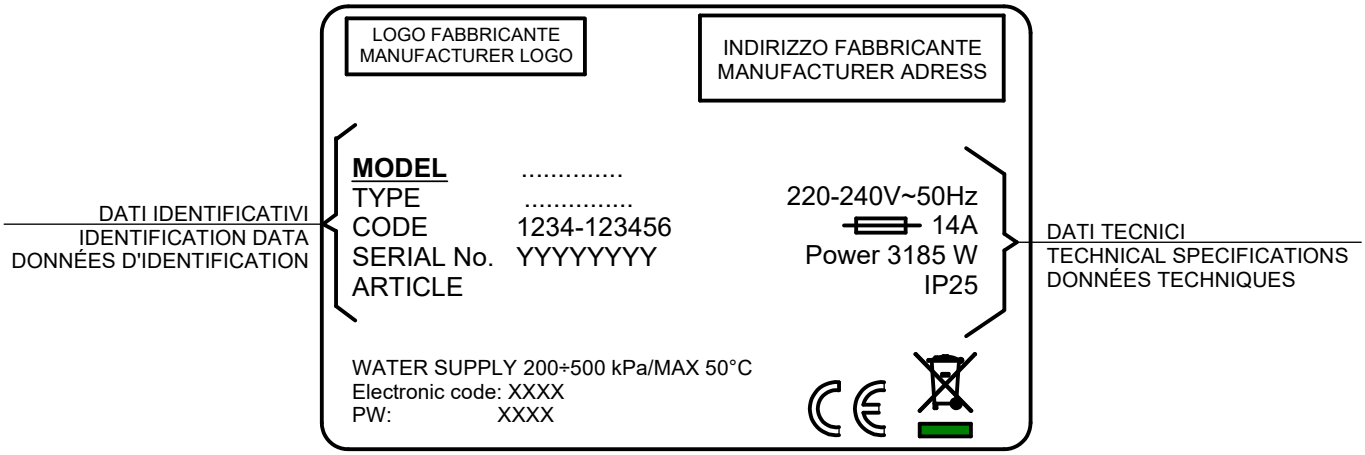

REV.00 (07/2020)	FK 50 M ELENCO TAVOLE - TABLES LIST - LISTE DES TABLEAUX	TAV.0_2

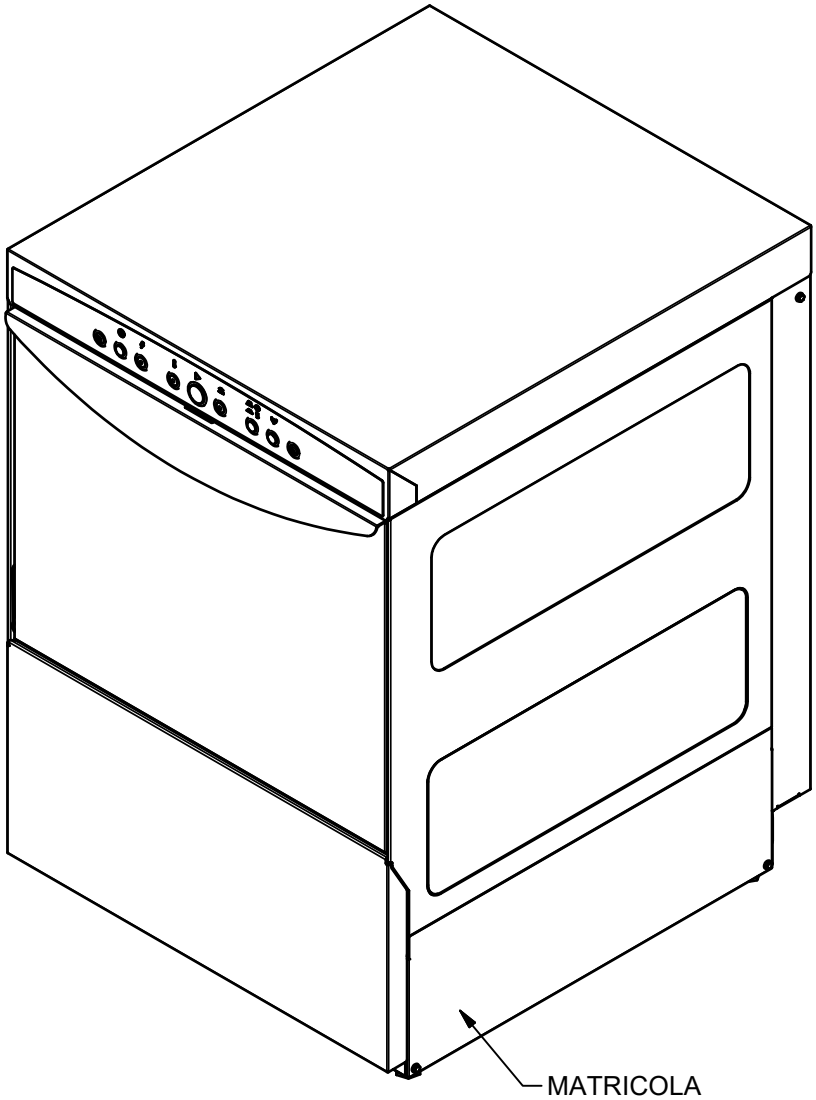

TAV 1	CARROZZERIA	BODY	CARROSSERIE
TAV 2	COMPONENTI ELETTRICI	ELECTRICAL COMPONENTS	COMPOSANTS ÉLECTRIQUES
TAV 3	COMPONENTI IDRAULICI	HYDRAULIC COMPONENTS	COMPOSANT HYDRAULIQUES
TAV 4	BRACCI LAVAGGIO / RISCIACQUO	WASH/RINSE ARMS	BRAS DE LAVAGE ET RINÇAGE
TAV 5	POMPA DI SCARICO	DRAIN PUMP	POMPE DE VIDANGE
TAV 6	ADDOLCITORE	WATER SOFTNER	ADOUCESSEUR
TAV 7	PANNELLO DI CONTROLLO	FRONT PANEL	PANNEAU DE CONTROLE
TAV 8	POMPA DI LAVAGGIO	WASHING PUMP	POMPE DE LAVAGE
TAV 9	DOSATORE DETERSIVO E BRILLANTANTE	DETERGENT AND RINSE AID DISPENSER	DOSEURS PRODUIT DE LAVAGE ET RINÇAGE

REV.00 (07/2020)	FK 50 M CARROZZERIA - BODY - CARROSSERIE	TAV.1_1

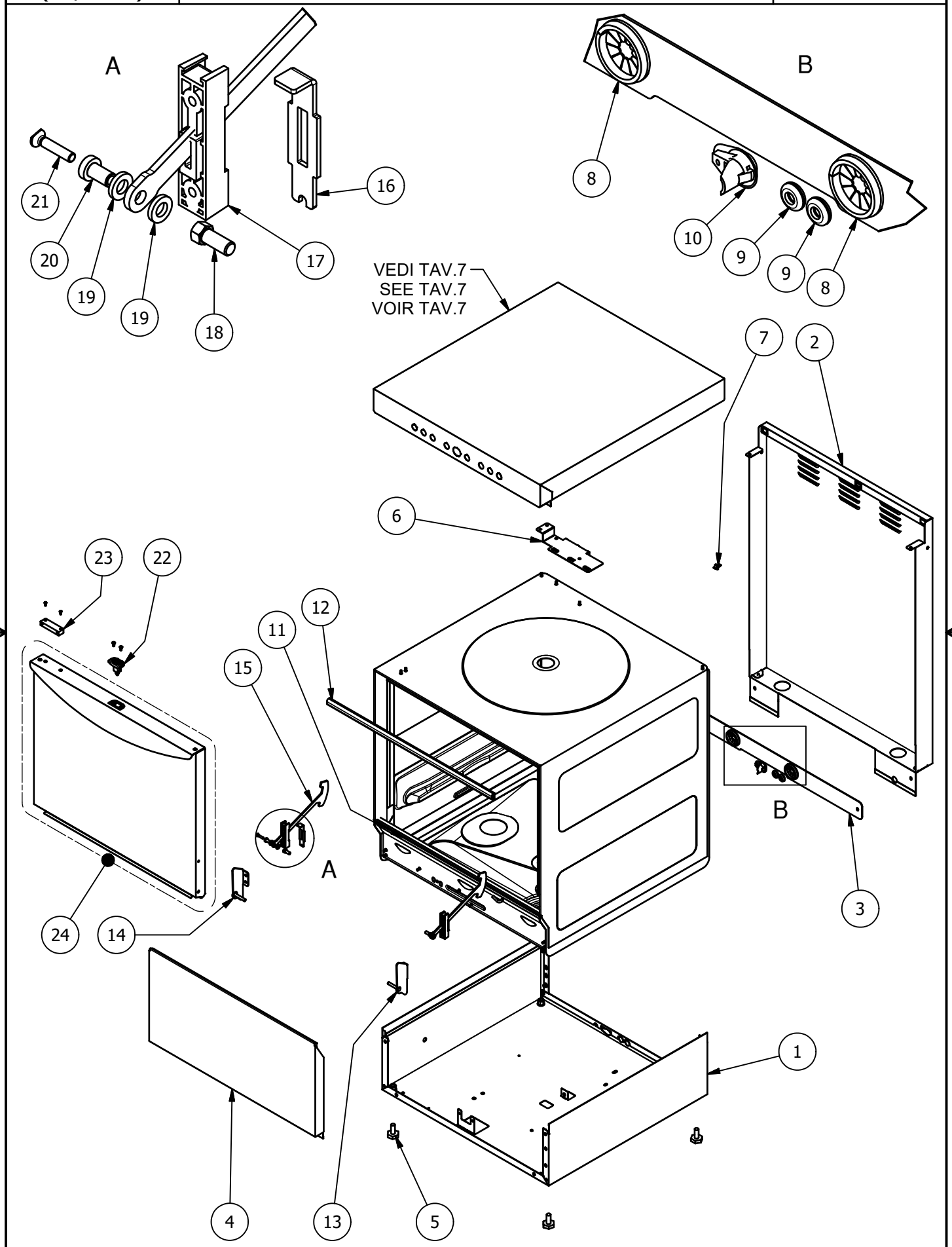

REV.00 (07/2020)	FK 50 M CARROZZERIA - BODY - CARROSSERIE	TAV.1_2

ELEM.	CODICE	DA/FROM MATR.	DESCRIZIONE	DESCRIPTION [EN]	DESCRIPTION [FR]	U.M.
1	0640200006		ASS. BASAMENTO	BASE ASSY	ENS. CARTER INFÉRIEUR	No.
2	1640200004		SCHIENALE INTERO	REAR PANEL	PANNEAU ARRIÈRE	No.
3	3012-0004		SCHIENALE INFERIORE	LOWER REAR PANEL	PANNEAU ARRIÈRE INFÉRIEUR	No.
4	1740700004		PANN. SOTTOPORTA INFERIORE	LOWER TRIM PANEL	PANNEAU DE PORTE INFÉRIEUR	No.
5	00006662		PIEDINO REGOLABILE (*)	ADJUSTABLE FOOT (*)	PIED REGLABLE (*)	No.
6	0235400001		STAFFA SUPPORTO PRESS. E MORSETTIERA	PRESSOST. AND TERMINAL BOARD SUPPORT	SUPPORT POUR COMMUTATEUR DE PRESSION ET TERMINAL	No.
7	00015239		CHIUSURA MASCHIO PER FISSAGGIO	MALE PLASTIC LATCH	FERMETURE POUR FIXATION	No.
8	00017100		PASSACAVO RIGIDO	RIGID CABLE GUIDE	GUIDE DU CABLE	No.
9	2005-0005		PASSACAVO PVC	CABLE GUIDE	GUIDE DU CABLE	No.
10	00000612		FERMACAVO	CABLE CLAMP	COLLIER DE SERRAGE CABLE	No.
11	00004084		GUARN. GOMMA EPDM 20x2mm L=565 (*)	EPDM GASKET 20x2mm L=565 (*)	JOINT DU EPDM 20x2mm L=565 (*)	No.
12	00017706		GUARNIZIONE PORTA L=565 (*)	DOOR GASKET L=565 (*)	JOINT DE PORTE L=565 (*)	No.
13	0166300002		ASS. STAFFA DX CERNIERA	RH MOUNTAIN BRACKET ASSY	ENS. LEVIER DE CHARNIÈRE DROITE	No.
14	0166400002		ASS. STAFFA SX CERNIERA	LH MOUNTAIN BRACKET ASSY	ENS. LEVIER DE CHARNIÈRE GAUCHE	No.
15	1200100002		ASTA CERNIERA PORTA	DOOR TENSIONER	TIGE DE LA CHARNIERE	No.
16	0780100002		BATTUTA TIRANTE PORTA	BLOCK FOR DOOR TENSIONER	FERME DU TIGE	No.
17	1120600002		GUIDA TIRANTE PORTA	TENSIONER GUIDE	GUIDE SUPP. CHARNIÈRE PORTE	No.
18	0430800001		PERNO TIRANTE	TENSIONING PIN	TENSIONING PIN	No.
19	0111200001		RONDELLA	DOOR ROD WASHER	RONDELLE	No.
20	1870100002		PERNO CON TESTINA	LINCHPIN	TENSIONING PIN	No.
21	1002-0002		VITE TCPS M4x20 INOX	S.S. M4x20 TCPS SCREW	VIS TCPS M4x20 INOX	No.
22	0161100002		ASS. SCROCCO PORTA (*)	DOOR JACK ASSY (*)	ENSEMBLE PORTE DE SERRURE (*)	No.
23	00005679		UNITA MAGNETICA RETT. (*)	MAGNETIC UNIT (*)	AIMANT UNIT (*)	No.
24	8307-0020		ASS. PORTA COMPLETA	COMPLETA DOOR ASSY	ENSEMBLE DE PORTE COMPLET	No.

(*) RICAMBI CONSIGLIATI / RECOMMENDED SPARE PARTS / PIECES DETACHEES RECOMMANDEES

REV.00 (07/2020)	FK 50 M COMPONENTI ELETTRICI - ELECTRICAL COMPONENTS - COMPOSANT ELECTRIQUES	TAV.2_1

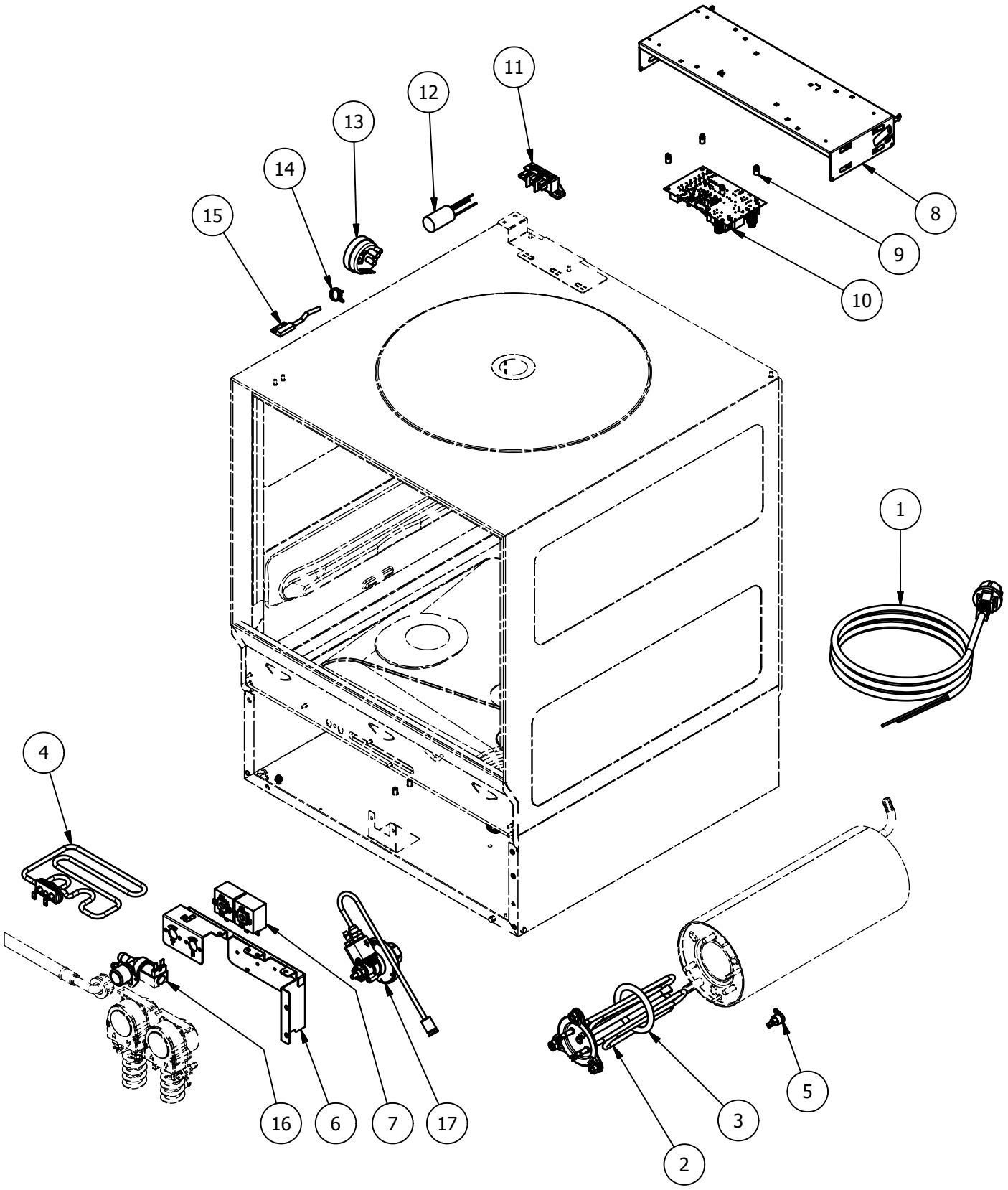

REV.00 (07/2020)	FK 50 M COMPONENTI ELETTRICI - ELECTRICAL COMPONENTS - COMPOSANT ELECTRIQUES	TAV.2_2

ELEM.	CODICE	DA/FROM MATR.	DESCRIZIONE	DESCRIPTION [EN]	DESCRIPTION [FR]	U.M.
1	00014685		CAVO ALIMENTAZIONE 3G 1.5 SCHUKO	POWER CABLE 3G 1.5 SCHUKO	CABLE D'ALIMENTATION 3G 1.5 SCHUKO	No.
2	4025-0001	84710200	RESISTENZA 220-240V 2.7kW (*)	RESISTANCE 2,7kW 220-240V (*)	RÉSISTANCE 2,7kW 220-240V (*)	No.
3	00000057		OR PER FLANGIA BOILER	OR FOR BOILER FLANGE	OR POUR BRIDE DU CHAUDIÈRE (*)	No.
4	0130400001		RESISTENZA 220-240V 2.4kW (*)	RESISTANCE 2,4kW 220-240V (*)	RÉSISTANCE 2,4kW 220-240V (*)	No.
5	00004913		TERMOSTATO BIMETALL. A R.M. (*)	MANUAL RESET SAFETY THERMOSTAT (*)	THERMOSTAT DE SECURITÉ À RÉARM. MANUEL (*)	No.
6	0231400003		SUPPORTO DOSATORI TERMOSTATI	DETERGENT DISPENSER SUPPORT	DOSEUR SOUTIEN	No.
7	00000359		TERMOSTATO DA 0 A 90°C (*)	WORKING THERMOSTAT 0-90°C (*)	THERM. DE TRAVAIL 0-90°C (*)	No.
8	0740100001		SUPPORTO ELETTRICO	ELECTRICAL SUPPORT	SUPPORT ELETRIQUE	No.
9	1020-0001		DISTANZIALE SCHEDA ELETTRONICA	SPACER FOR ELECTRONIC TIMER	ESPACEUR DE CARTE ÉLECTRONIQUE	No.
10	00017093		TIMER ELETTRONICO MULTIFUNZIONE (*)	MULTIFUNCTION ELECTRONIC TIMER (*)	MINUTERIE ÉLECTRONIQUE MULTI TEMPS (*)	No.
11	4055-0002		MORSETTIERA FV 110 40A 450V	TERMINAL BOARD FV 110 40A 450V	BLOC TERMINAL FV 110 40A 450V	No.
12	00002779		FILTRO ANTIDISTURBO 0,47 uF	FILTER 0,47 uF	FILTRE ANTIPARASITE 0.47 uF	No.
13	00016403		PRESSOSTATO LIVELLO 28/12 (*)	PRESSURE SWITCH 28/12 (*)	PRESSOSTAT DE NIVEAU D'EAU 28/12 (*)	No.
14	00000388		FASCETTA BIFIL. Ø14.4X15.1	CLAMP Ø14.4X15.1	COLLIER Ø14.4X15.1	No.
15	00012685		MICROINTERRUTTORE MAGNETICO (*)	MICRO SWITCH (*)	CAPTEUR MAGNETIQUE OUV. DE PORTE (*)	No.
16	00000394		ELETTROVALV. SING. 90° 230V (*)	SINGLE SOLEN. VALVE 90° 230V (*)	ELECTROV. UNIQUE 90° 230V (*)	No.
17	8380-0001		ASS. DOSATORE BRILL. A PRESS. DI RETE (*)	RINSE-AID PUMP (*)	DOSEUR DE RINCAGE (*)	No.

(*) RICAMBI CONSIGLIATI / RECOMMENDED SPARE PARTS / PIECES DETACHEES RECOMMANDEES

REV.00 (07/2020)	F 50 M COMPONENTI IDRAULICI - HYDRAULIC COMPONENTS - COMPOSANT HYDRAULIQUES	TAV.3_1

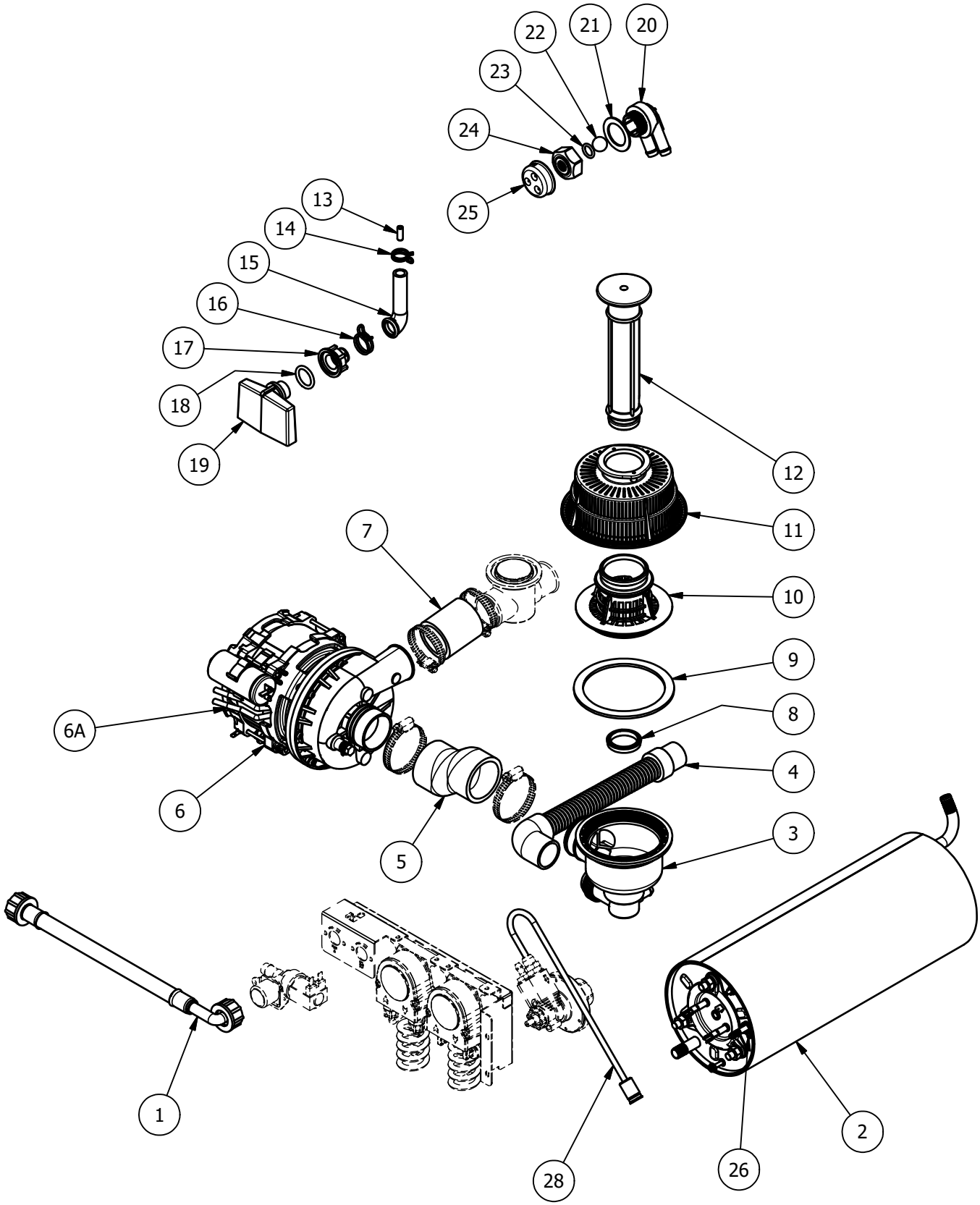

REV.00 (07/2020)	FK 50 M COMPONENTI IDRAULICI - HYDRAULIC COMPONENTS - COMPOSANT HYDRAULIQUES	TAV.3_2

ELEM.	CODICE	DA/FROM MATR.	DESCRIZIONE	DESCRIPTION [EN]	DESCRIPTION [FR]	U.M.
1	00000139		TUBO CARICO L=2000mm	WATER INLET HOSE L=2000mm	TUYAU D□ENTRÉE L=2000mm	No.
2	0160500006		ASS. BOILER 5Lt	ASS. BOILER 5Lt	ASS. CHAUDIÈRE 5Lt	No.
3	2050100003		POZZETTO SCARICO ASPIRAZIONE	EXHAUST COCKPIT	PUITS DU FILTRE	No.
4	0271500002		TUBO SCARICO 90° L=2500 mm	DRAIN HOSE L=2500mm	TUYAU DE REFOULEMENT L=2500mm	No.
5	0220100003		MANICOTTO ASPIRAZIONE	SUCTION PUMP SLEEVE	MANCHON D'ASPIRATION	No.
6	6001-0003		POMPA LAVAGGIO 230V 50Hz	WASHING PUMP 230V 50Hz	POMPE DE LAVAGE 230V 50Hz	No.
6A	6001-0007		POMPA LAVAGGIO 230V 60Hz	WASHING PUMP 230V 60Hz	POMPE DE LAVAGE 230V 60Hz	No.
7	3080-0001		MANICOTTO MANDATA POMPA	PUMP DELIVERY SLEEVE	MANCHON DE LIVRAISON	No.
8	000017178		GUARNIZIONE TROPPOPIENO	OVERFLOW GASKET	JOINT DU TROP PLEIN	No.
9	0080600004		GUARNIZIONE POZZETTO	EXHAUST COCKPIT GASKET	JOINT DU PUITS DU FILTRE	No.
10	0235200003		GHIERA GRUPPO FILTRANTE	THREADED RING FOR FILTERING GROUP	BAGUE POUR FILTRE	No.
11	0470900002		FILTRO GRUPPO FILTRANTE	FILTER OF FILTERING GROUP	FILTRE CUVE	No.
12	0320200007		TROPPOPIENO VASCA	OVERFLOW	TROP PLEIN EN PLASTIQUE	No.
13	00002933		TUBETTO TENUTA GABBIA D'ARIA	AIR TRAP JUNCTION	JONCTION POUR TRAPPE D'AIR	No.
14	00000388		FASCETTA BIFIL. Ø14.4X15.1	CLAMP Ø14.4X15.1	COLLIER Ø14.4X15.1	No.
15	00002927		RACCORDO ANTICONDENSA	FITTING	RACCORD ANTI-CONDENSATION	No.
16	00000391		FASCETTA BIFIL. Ø19.6x20.6	CLAMP Ø19.6x20.6	COLLIER Ø19.6x20.6	No.
17	00003536		DADO GABBIA '□□ARIA	NUT FOR AIR TRAP	ÉCROU POUR TRAPPE DE L'AIR	No.
18	00002934		OR 4081	OR 4081	OR 4081	No.
19	0480100001		GABBIA D□ARIA VASCA (*)	AIR TRAP (*)	TRAPPE D□□AIR (*)	No.
20	0002802		CORPO VALVOLA ANTIRIFLUSSO	NO RETURN VALVE BODY	CORPS VANNE ANTI REFLUX	No.
21	00003086		GUARNIZIONE GOMMA	RUBBER GASKET	JOINT	No.
22	00000144		SFERA 5/8" PTFE (*)	SPHERE 5/8" PTFE (*)	BALLE 5/8" PTFE (*)	No.
23	00000123		OR 115	OR 115	OR 115	No.
24	00002803		GHIERA VALVOLA ANTIRIFLUSSO	NO RETURN VALVE RING NUT	ECROU CLAPET ANTI□RETOUR	No.
25	00016213		COP. VALVOLA ANTIRIFLUSSO	COVER NO RETURN VALVE	COUVERCLE CLAPET ANTI□RETOUR	No.
26	1030-0001		FASCETTA BIFIL. Ø 11,0□10,4	WIRE CLAMP Ø 11,0□10,4	PINCE À DEUX FILS Ø 11,0□10,4	No.
27	00004120		DISTRIBUTORE 3 VIE	THREE-WAY DISTRIBUTOR	DISTRIBUTEUR TROIS VOIES	No.
28	00005070		ASS. FILTRO DOSATORE BRILLANTANTE	HOSE, FILTER AND DROWNED PISTON FOR RINSE-AID DISPENSER	TUYAU, FILTRE ET PLONGEUR POUR DOSEUR DE RINCAGE	No.

(*) RICAMBI CONSIGLIATI / RECOMMENDED SPARE PARTS / PIECES DETACHEES RECOMMANDEES

REV.00 (07/2020)	FK 50 M BRACCI DI LAVAGGIO/RISCIACQUO - WAS/RINSE ARMS - BRAS DE LAVAGE/RINCAGE	TAV.4_1

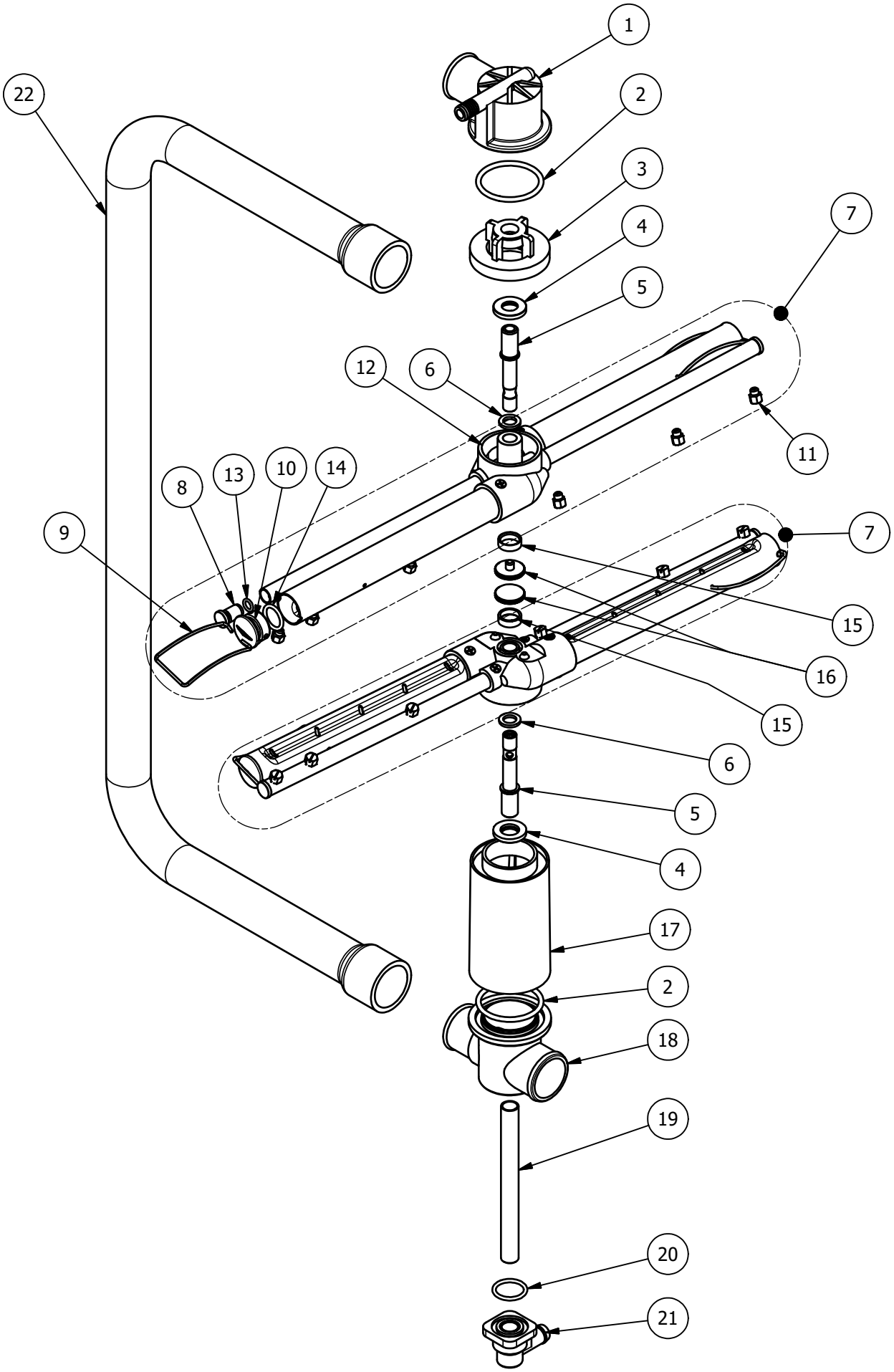

REV.00 (07/2020)	FK 50 M BRACCI DI LAVAGGIO/RISCIACQUO - WAS/RINSE ARMS - BRAS DE LAVAGE/RINCAGE	TAV.4_2

ELEM.	CODICE	DA/FROM MATR.	DESCRIZIONE	DESCRIPTION [EN]	DESCRIPTION [FR]	U.M.
1	00003515		CONCHIGLIA SUP. GRIGIO	DRAIN	BONDE	No.
2	00001633		OR 147	OR 147	OR 147	No.
3	00012208		FLANGIA A BOCCAGLIO	FLANGE	BRIDE	No.
4	00004671		RONDELLA DI APPOGGIO	WASHER	RONDELLE D'APPUI	No.
5	00002153		FULCRO CROCIERA	WASHING SHAFT PIN	AXE BRAS LAVAGE	No.
6	00001173		RONDELLA PER GIRANTE (*)	WASHING ARM WASHER (*)	RONDELLE POUR BRAS DE LAVAGE (*)	No.
7	00015517		ASS. GIRANTE LAVAGGIO	WASHING ARM	BRAS DE LAVAGE	No.
8	00002502		TAPPO RISCIACQUO (*)	RINSE ARM PLUG (*)	BOUCHON BRAS DE RINCAGE (*)	No.
9	00002654		MOLLA AD ARCHETTO	SPRING	RESSORT	No.
10	00002650		TAPPO TUBI LAVAGGIO (*)	WASHING ARM CAP (*)	BOUCH. BRAS DE LAVAGE (*)	No.
11	00017155		UGELLO RISCIACQUO INOX	RINSE NOZZLE	GICLEUR RINCAGE	No.
12	00001954		DISTRIBUTORE 4RP (*)	CONNECTOR (*)	CONNECTEUR (*)	No.
13	00002531		OR 106	OR 106	OR 106	No.
14	00000093		OR 121	OR 121	OR 121	No.
15	00002808		ANELLO PTFE (*)	PTFE RING (*)	JOINT EN PTFE (*)	No.
16	00001133		VITE INOX GODRONATA (*)	S.S. KNURLED SCREW (*)	VIS INOX GODRONNE' (*)	No.
17	00004673		COPRITIRANTE	COVER	COUVRE-TIRANT	No.
18	00002149		DISTRIBUTORE DOPPIO LAVAGGIO	DOUBLE WASH DISTRIBUTOR	DISTRIBUTEUR DOUBLE LAVAGE	No.
19	00002154		TIRANTE INFERIORE	FIXING PART	TIRANT INFERIEUR	No.
20	00000025		OR 128	OR 128	OR 128	No.
21	00010620		RACCORDO 90° M13x1	90° M13x1 CONNECTION	RACCORD 90° M13x1	No.
22	1670100004		RAMPA LAVAGGIO	WASH PIPE	TUYAU DE LAVAGE	No.

(*) RICAMBI CONSIGLIATI / RECOMMENDED SPARE PARTS / PIECES DETACHEES RECOMMANDEES

REV.00 (07/2020)	FK 50 M KIT POMPA DI SCARICO - KIT DRAIN PUMP - KIT POMPE DE VINDAGE	TAV.5_1

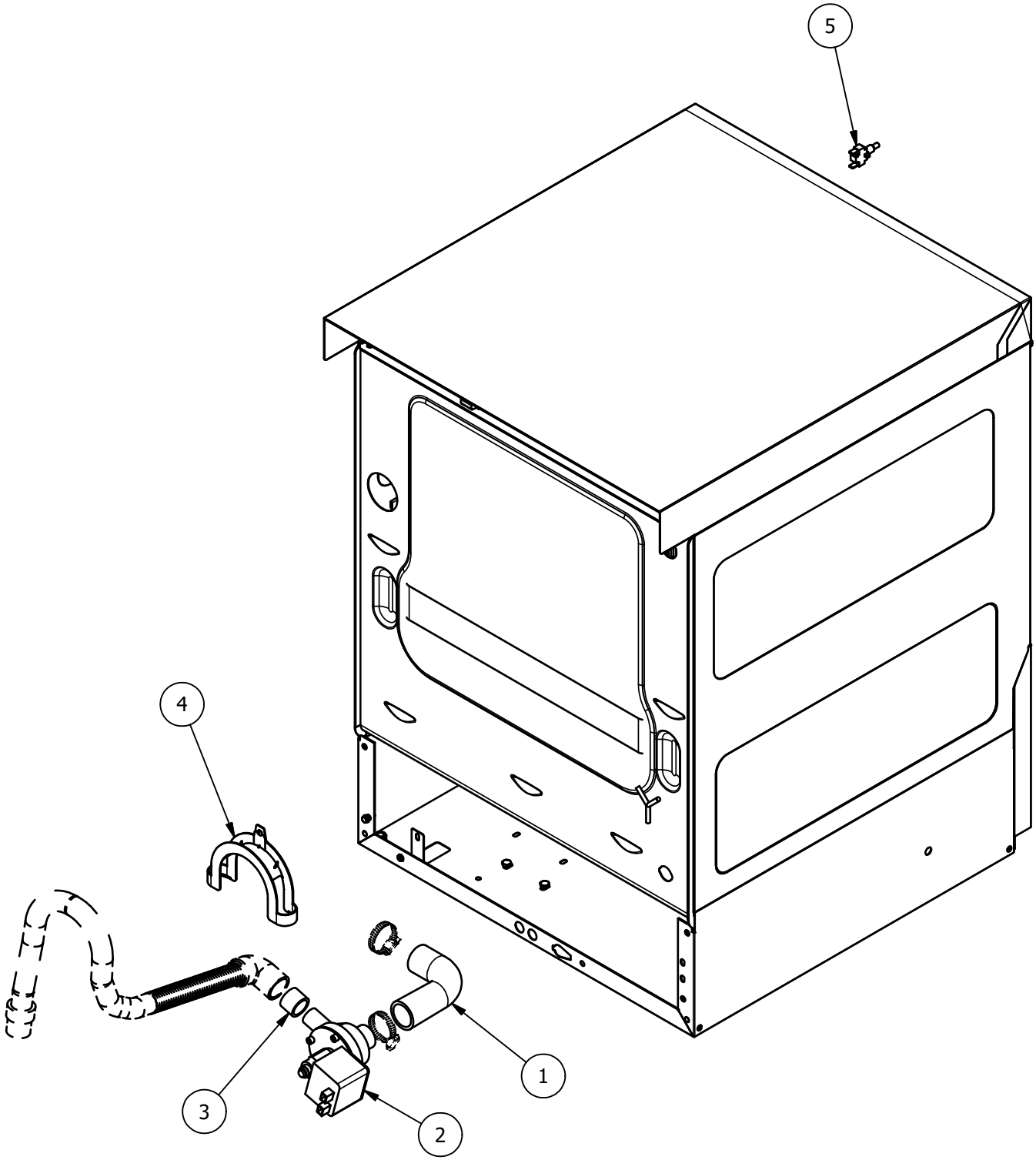

KIT POMPA DI SCARICO COMPLETO - COMPLETE DRAIN PUMP KIT - KIT POMPE DE VIDANGE COMPLET: 8395-0002

REV.00 (07/2020)	FK 50 M KIT POMPA DI SCARICO - KIT DRAIN PUMP - KIT POMPE DE VINDAGE	TAV.5_2

ELEM.	CODICE	DA/FROM MATR.	DESCRIZIONE	DESCRIPTION [EN]	DESCRIPTION [FR]	U.M.
1	00004985		MANICOTTO IN GOMMA	RUBBER HOSE	TUYAU EN GOMME	No.
2	00009563		POMPA DI SVUOTAMENTO 230V 50Hz (*)	DRAIN PUMP 230V 50Hz (*)	POMPE DE VIDANGE 230V 50Hz (*)	No.
2A	6006□0001		POMPA DI SVUOTAMENTO 230V 60Hz (*)	DRAIN PUMP 230V 60Hz (*)	POMPE DE VIDANGE 230V 60Hz (*)	No.
3	3040-0002		TUBO EPDM	EPDM HOSE	TUYAU EN EPDM	No.
4	00016395		CURVA SUPPORTO TUBO SCARICO	DRAIN HOSE SUPPORT	SUPPORT DU TUYAU D'ÉCHAPPEMENT	No.
5	00004322		PULSANTE CM-NA (*)	CM-NO PUSH BUTTON (*)	CM-NO BOUTON (*)	No.

(*) RICAMBI CONSIGLIATI / RECOMMENDED SPARE PARTS / PIECES DETACHEES RECOMMANDEES

REV.00 (07/2020)	FK 50 M ADDOLCITORE - WATER SOFTNER - ADOUCISSEUR	TAV.6_1

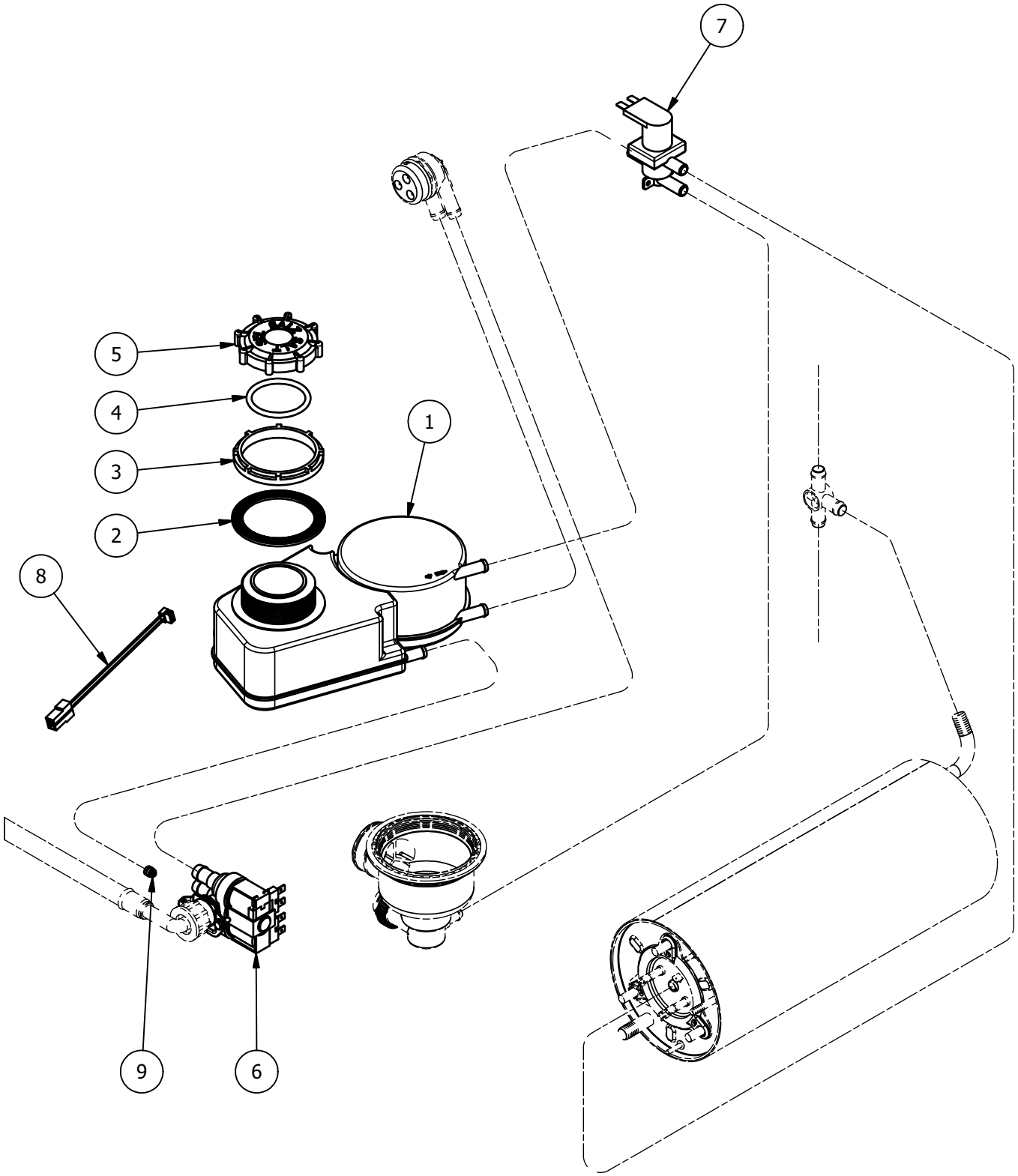

REV.00 (07/2020)	FK 50 M ADDOLCITORE - WATER SOFTNER - ADOUCISSEUR	TAV.6_2

ELEM.	CODICE	DA/FROM MATR.	DESCRIZIONE	DESCRIPTION [EN]	DESCRIPTION [FR]	U.M.
1	00017209		ASS. ADDOLCITORE AUTOMATICO	AUTOM. WATER SOFTNER ASSY	ENS. DU L'ADOUCISSEUR	No.
2	00006152		GUARNIZIONE	GASKET	JOINT	No.
3	2019-0001		GHIERA ADDOLCITORE	THREADED RING OF WATER SOFTNER	BAGUE POUR L'ADOUCISSEUR	No.
4	2060-0004		OR TAPPO ADDOLCITORE	CAP OR	OR DU CAP	
5	2006-0001		TAPPO ADDOLCITORE	WATER SOFTNER CAP	CAP DU L'ADOUCISSEUR	No.
6	2017-0001		ELETTROVALVOLA DOPPIA 90° 230V 50/60 Hz (*)	SOLENOID VALVE 90° 230V 50/60 Hz (*)	ÉLECTROVANNE 90° 230V 50/60 Hz (*)	No.
7	00015785		ELETTROV. DOPPIA USCITA (*)	SOLENOID VALVE DOBLE EXIT (*)	ÉLECTROVANNE À DOUBLE SORTIE (*)	No.
8	4040-0003		CAVO COLLEGAMENTO ADDOLCITORE AUTOMATICO	WATER SOFTNER CONNECTION CABLE	CÂBLAGE DU L'ADOUCISSEUR	No.
9	00006524		RIDUTTORE DI PORTATA USCITA 0.5 L/MIN	FLOW REDUCER 0.5 L/MIN	RÉDUCTEUR DE DÉBIT 0.5 L/MIN	No.

(*) RICAMBI CONSIGLIATI / RECOMMENDED SPARE PARTS / PIECES DETACHEES RECOMMANDEES

REV.00 (07/2020)	FK 50 M PANNELLO COMANDI - FRONT PANEL - PANNEAU DE CONTROLE	TAV.7_1

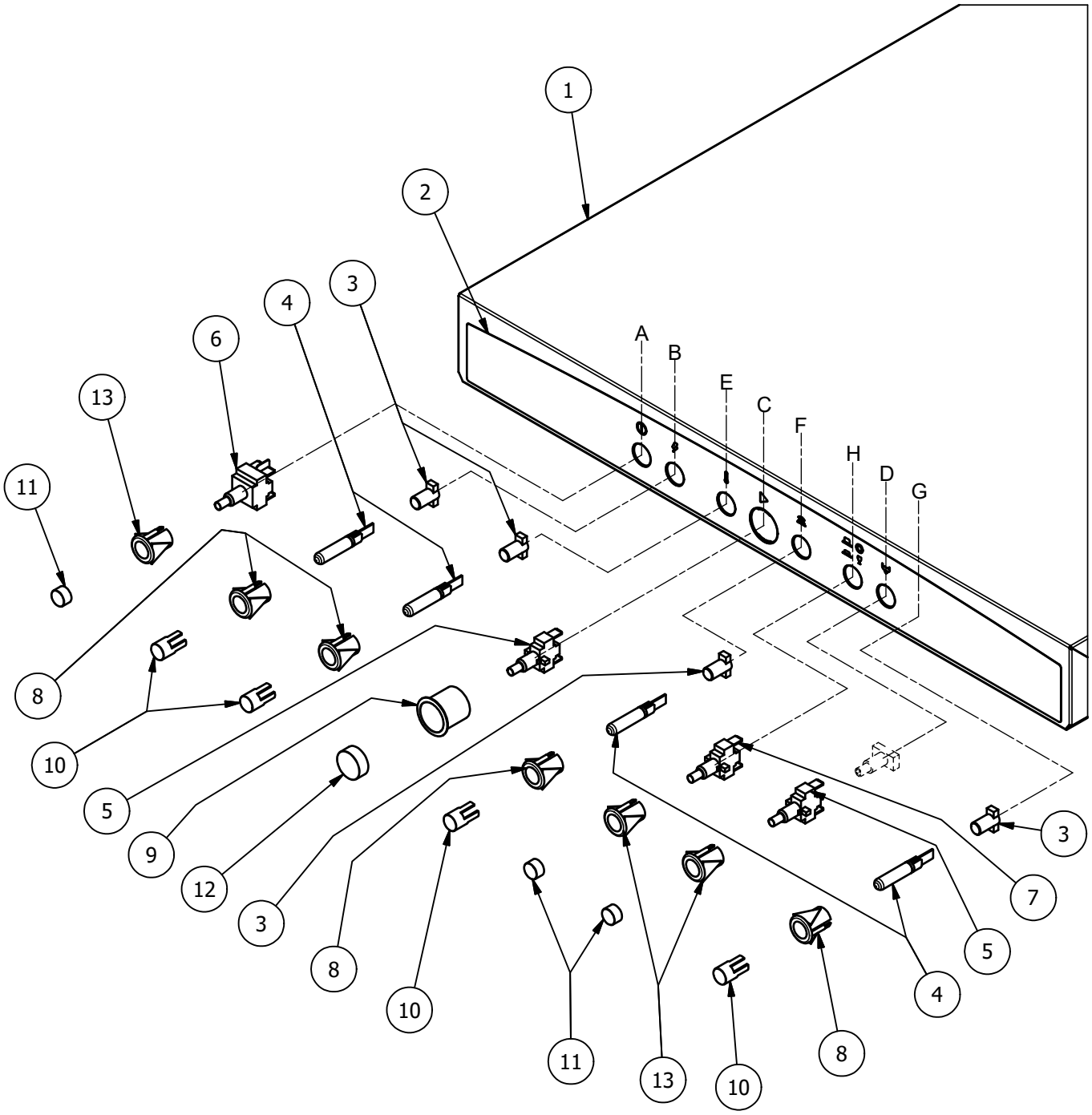

A	ON-OFF	ON-OFF	ON-OFF
B	LAMPADA SPIA PRES. TENSIONE	LIGHT: THE MACHINE IS WORKING	LAMPE TEMOIN: MACHINE EN MARCHE
C	STAR CICLO	START CYCLE	DEMARRAGE DU LAVAGE
D	POMPA DI SCARICO (OPT)	DRAIN PUMP BUTTON (OPT)	BOUTON POMPE DE VIDANGE (OPT)
E	LAMPADA SPIA MACCHINA PRONTA	LIGHT: MACHINE READY TO WASHING	LAMPE TEMOIN: MACHINE PRETE
F	LAMPADA SPIA CICLO	LIGHT: TURNS ON DURING THE CYCLE	LAMPE TEMOIN: MACHINE EN LAVAGE
G	LAMPADA SPIA PRES. SALE (OPT)	LIGHT: NO SALT INDICATOR (OPT)	LAMPE TEMOIN: ABSENCE DE SEL (OPT)
H	SELETTORE CICLO	CYCLE SELECTOR	SELECTION DU CYCLE

REV.00 (07/2020)	FK 50 M PANNELLO COMANDI - FRONT PANEL - PANNEAU DE CONTROLE	TAV.7_2

ELEM.	CODICE	DA/FROM MATR.	DESCRIZIONE	DESCRIPTION [EN]	DESCRIPTION [FR]	U.M.
1	8302-0009		ASS. CAPPOTTINA	UPPER COVER ASSY	ENSEMBLE COUVERCLE SUPÉRIEUR	No.
2	3501-0039		MEMBRANA AUTOADESIVA	ADHESIVE LABEL	MEMBRANE ADHÉSIVE	No.
3	00004045		STRUTTURA GUIDA (*)	LIGHT INDICATOR HOLDER (*)	SUPPORT D'IND. LUMINEUX (*)	No.
4	00004051		LAMPADA TRASPARENTE 230V (*)	230V TRANSPARENT IND. LIGHT (*)	230V INDICATEUR TRANSPARENT (*)	No.
5	00004322		PULSANTE CM-NA (*)	CM-NO PUSH BUTTON (*)	CM-NO BOUTON (*)	No.
6	00004323		INTERRUTTORE CM-NA BIPOLARE (*)	CM NO TWO POLE SWITCH (*)	CM NO COMMUTATEUR BIPOLAIRE (*)	No.
7	00006992		PULSANTE CM-NA (*)	CM-NO PUSH BUTTON (*)	CM-NO BOUTON (*)	No.
8	00017650		SUPPORTO D.16 GRIGIO SCURO	D.16 DARK GREY SUPPORT	D.16 SUPPORT GRIS FONCÉ	No.
9	2005-0001		SUPPORTO D.25 BLU	D.25 BLUE SUPPORT	D.25 SUPPORT BLEU	No.
10	00004049		GEMMA NEUTRA	NEUTRAL COVER FOR LAMP	COUVERTURE TRANSPARENTE	No.
11	00017777		TASTO GOFFRATO D.25 GRIGIO SCURO	D.25 DARK GREY EMBOSSED BUTTON	D.25 BOUTON GAUFRÉ GRIS FONCÉ	No.
12	2010-0001		TASTO GOFFRATO D.25 BLU	D.25 BLUE EMBOSSED BUTTON	D.25 BOUTON GAUFRÉ BLEU	No.
13	00017778		SUPPORTO D.25 GRIGIO SCURO	D.25 DARK GREY SUPPORT	D.25 SUPPORT GRIS FONCÉ	No.

(*) RICAMBI CONSIGLIATI / RECOMMENDED SPARE PARTS / PIECES DETACHEES RECOMMANDEES

REV.00 (07/2020)	FK 50 M POMPA DI LAVAGGIO - WASHING PUMP - POMPE DE LAVAGE	TAV.8_1

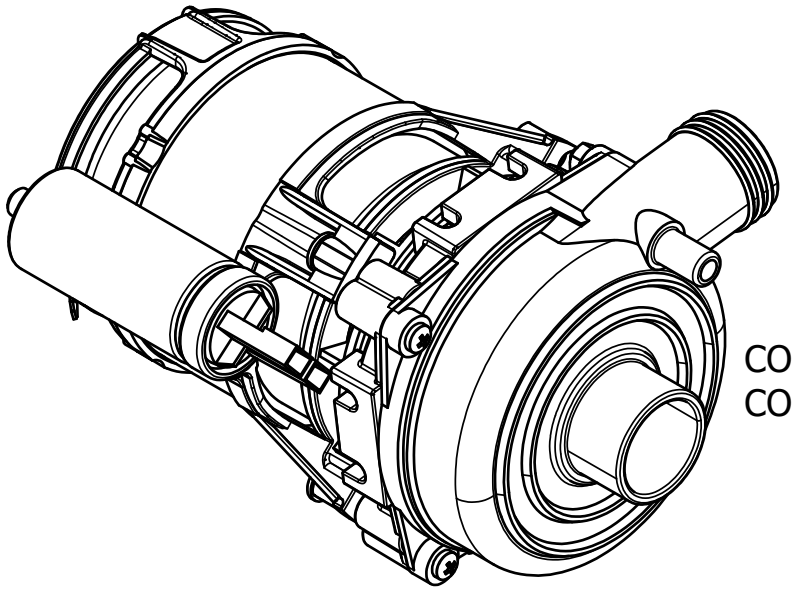

COD. 6001-0003 (230V 50Hz)
COD. 6001-0007 (230V 60Hz)

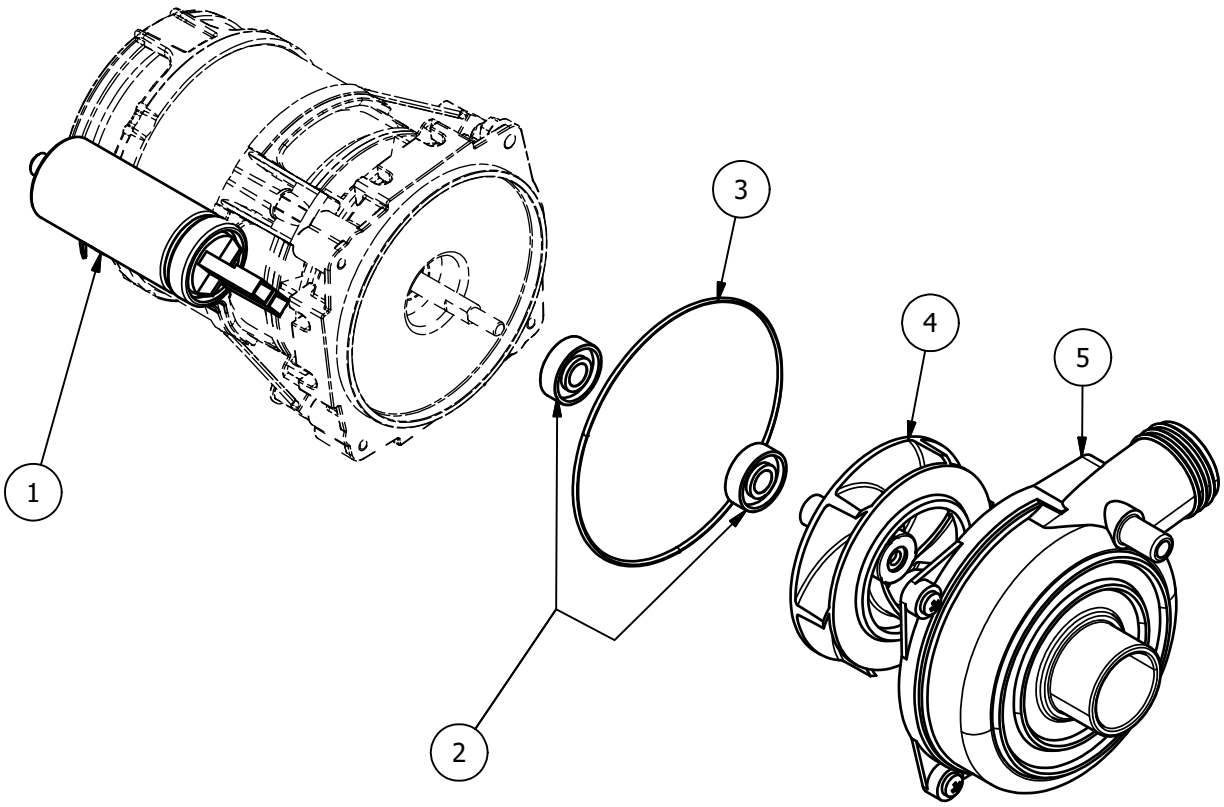

REV.00 (07/2020)	FK 50 M POMPA DI LAVAGGIO - WASHING PUMP - POMPE DE LAVAGE	TAV.8_2

ELEM.	CODICE	DA/FROM MATR.	DESCRIZIONE	DESCRIPTION [EN]	DESCRIPTION [FR]	U.M.
1	2080-0001		CONDENSATORE 12.5uF	CAPACITOR 12.5uF	CONDENSATEUR 12.5uF	No.
2	00010783		KIT TENUTA ROTANTE	SEAL KIT	KIT D'ÉTANCHÉITÉ	No.
3	00003492		GUARNIZIONE OR 91,7x1,78 NBR POMPA OLYMPIA (13893) -	GASKET	JOINT	No.
4	00014119		GIRANTE d.88 PER POMPA 50Hz	D.88 IMPELLER FOR 50Hz PUMP	ROUE D.88 POUR 50hZ POMPE	No.
4A	2068-0008		GIRANTE d.75 PER POMPA 60Hz	D.75 IMPELLER FOR 75Hz PUMP	ROUE D.75 POUR 60hZ POMPE	No.
5	2070-0002		CHIOCCIOLA D.93 SX POMPA OLYMPIA (13893) -	PUMP CASE	CARTER POUR POMPE	No.

(*) RICAMBI CONSIGLIATI / RECOMMENDED SPARE PARTS / PIECES DETACHEES RECOMMANDEES

REV.00 (07/2020)	FK 50 M DOS. DET. E BRILL. - DETERG. AND RINSE-AID DISPENSER - DOS. PRODUIT DE LAV. ET RINC.	TAV.9_1

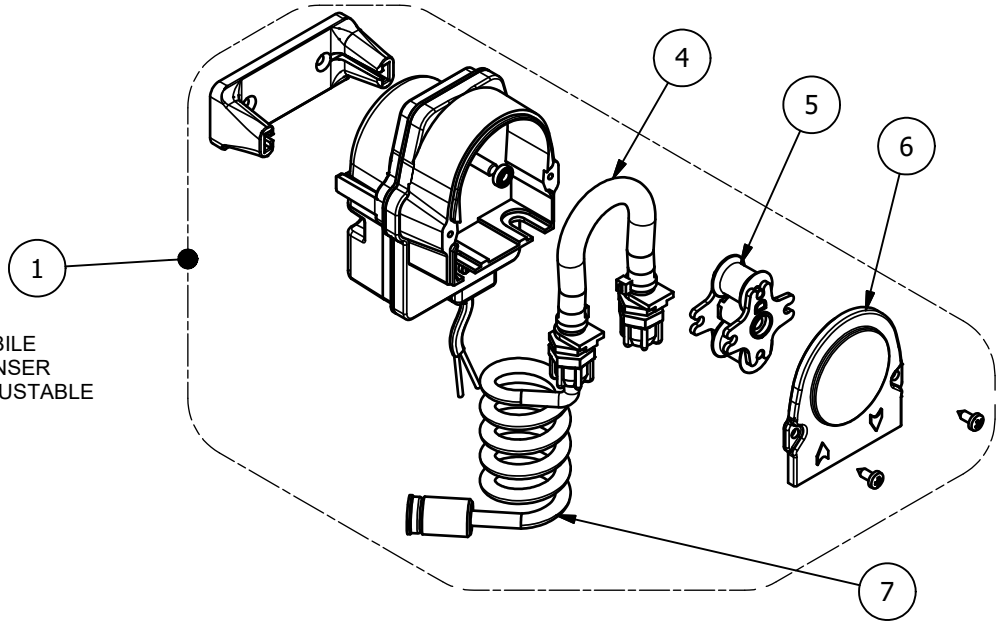

DOSATORE DETERSIVO REGOLABILE
ADJUSTABLE DETERGENT DISPENSER
DOSEUR PRODUIT DE LAVAGE AJUSTABLE

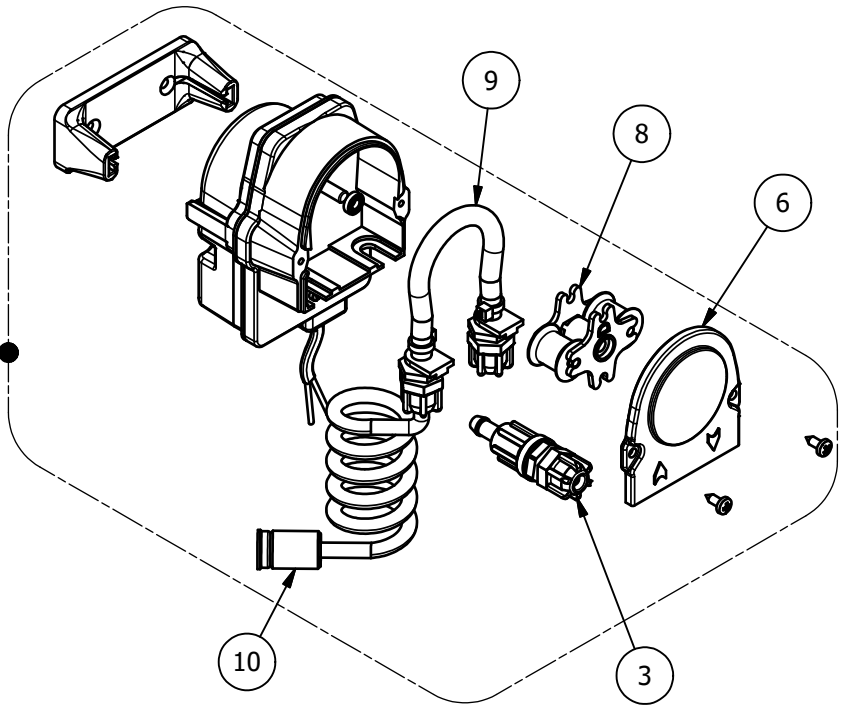

DOSATORE BRILLANTANTE REGOLABILE
ADJUSTABLE RINSE-AID DISPENSER
DOSEUR PRODUIT DE RINCAGE AJUSTABLE

REV.00 (07/2020)	FK 50 M DOS. DET. E BRILL. - DETERG. AND RINSE-AID DISPENSER - DOS. PRODUIT DE LAV. ET RINC.	TAV.9_2

ELEM.	CODICE	DA/FROM MATR.	DESCRIZIONE	DESCRIPTION [EN]	DESCRIPTION [FR]	U.M.
1	00016163		ASS. DOS.DETER. ELETTR. REGOL. 0-3Lt/h	ADJUSTABLE DETER. DISPENSER 0-3Lt/h	DOSEUR PRODUIT DE LAV. AJUSTABLE 0-3Lt/h	No.
2	8395-0024		ASS. DOS. BRILL. ELETTR. REGOL. 0-0.5Lt/h	ADJUSTABLE RINSE AID DISPENSER 0-0.5Lt/h	DOSEUR RINCAGE AJUSTABLE 0-0.5Lt/h	No.
3	2018-0001		ASS. VALVOLA DI NON RITORNO DOS. BRILL. (*)	NON RETOURN VALVE FOR RINSE AID DISP. (*)	ENS. DU VANNE ANTI-RETOUR POUR RINCAGE (*)	No.
4	00017128		TUBO INTERNO DOSAT. DETERSIVO (*)	INTERNAL DETERG. DISPENSER HOSE (*)	TUBE INTERNE POUR DOSEUR PRODUIT DE LAV. (*)	No.
5	00006632		ASS. PORTARULLI DOS. DETERSIVO (*)	DETERGENT DISPENSER ROLL HOLDER ASSY (*)	ENSEMBLE SUPPORT DE ROULEAU DOSEUR PRODUIT DE LAV. (*)	No.
6	8395-0013		COPERCHIO DI CHIUSURA	COVER ASSY	COUVERTURE DE FERMETURE	No.
7	00005069		ASS. FILTRO DOSAT. DETERS. CON TUBO	DETERG. DISPENS. FILTER ASSY	ENS. DU FILTRE DU DOSEUR PRODUIT DE LAV. AVEC TUBE	No.
8	8395-0014		ASS. PORTARULLI DOS. BRILL. (*)	RINSE AID DISPENSER ROLL HOLDER ASSY (*)	ENSEMBLE SUPPORT DE ROULEAU DOSEUR RINC. (*)	No.
9	00017129		TUBO INTERNO DOSAT. BRILLANTANTE (*)	INTERNAL RINSE AID DISPENSER HOSE (*)	TUBE INTERNE POUR DOSEUR RINCAGE (*)	No.
10	00005070		ASS. FILTRO DOSAT. BRILL. CON TUBO	RINSE AID DISPENS. FILTER ASSY	ENS. DU FILTRE DU DOSEUR RINCAGE AVEC TUBE	No.

(*) RICAMBI CONSIGLIATI / RECOMMENDED SPARE PARTS / PIECES DETACHEES RECOMMANDEES