KASTEL
COOL & CLEAN

CATALOGO PARTI DI RICAMBIO
SPARE PARTS CATALOGUE
CATALOGUE PIECES DETACHEES
ERSATZTEILKATALOG
CATALOGO DE PIEZAS DE RICAMBIO
CATALOGO PEÇAS DE REPOSIÇÃO

MOD. HK 1500E
Dishwasher basket 50x50
Partial double skinned
Electronic controls

INFORMAZIONI GENERALI

A. Il catalogo serve per richiedere con esattezza le parti di ricambi, in base al **MODEL** indicato nella matricola della macchina. Negli ordini indicare la posizione, il codice, la descrizione e la quantità delle parti di ricambio;
B. I disegni delle parti di ricambio sono indicativi e NON rappresentano il pezzo reale;
C. I dati contenuti in questo catalogo sono indicativi e possono essere soggetti a modifiche senza preavviso.

GENERAL INFORMATIONS

A. This catalog order exactly the right spare parts, according to the **MODEL** indicated on the identification plate of the machine. When ordering, specify the position, the code, the description and the quantity of spare parts;
B. The spare parts drawings are general and DO NOT represent the real part;
C. The contents of this catalog are general, and can undergo changes without prior notice.

INFORMATIONS GENERALES

A. Ce catalogue est utilisé pour commander exactement les pièces détachèes, selon le **MODEL** indiqué sur la plaque d'identification de la machine. Les commandes doivent indiques la posizition, le code, la description et la quantité des pièces détachèes;
B. Les dessins des pièces détachées sont indicatif, et NE raprésentent pas le pièces concernée;
C. Les données de ce catalogue sont citées seulement à titre indicatif et peuvent être l'objet de modifications sans avis préalalble.

LETTURA DELLA MATRICOLA MACCHINA **CONSTRUCTION OF MACHINE ID NUMBER** **LECTURE DONNÉE DE LA MACHINE**

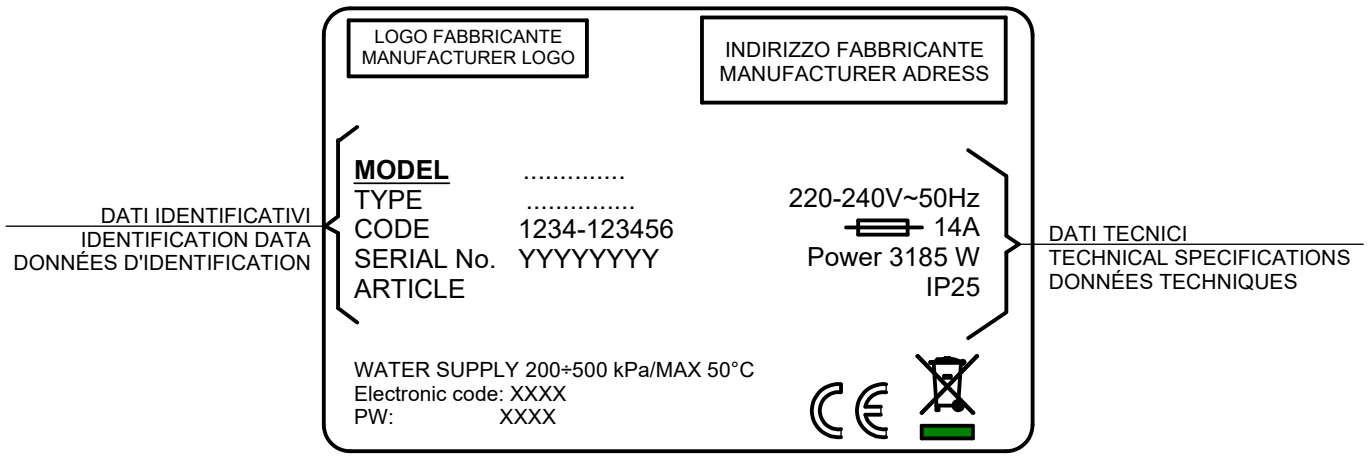

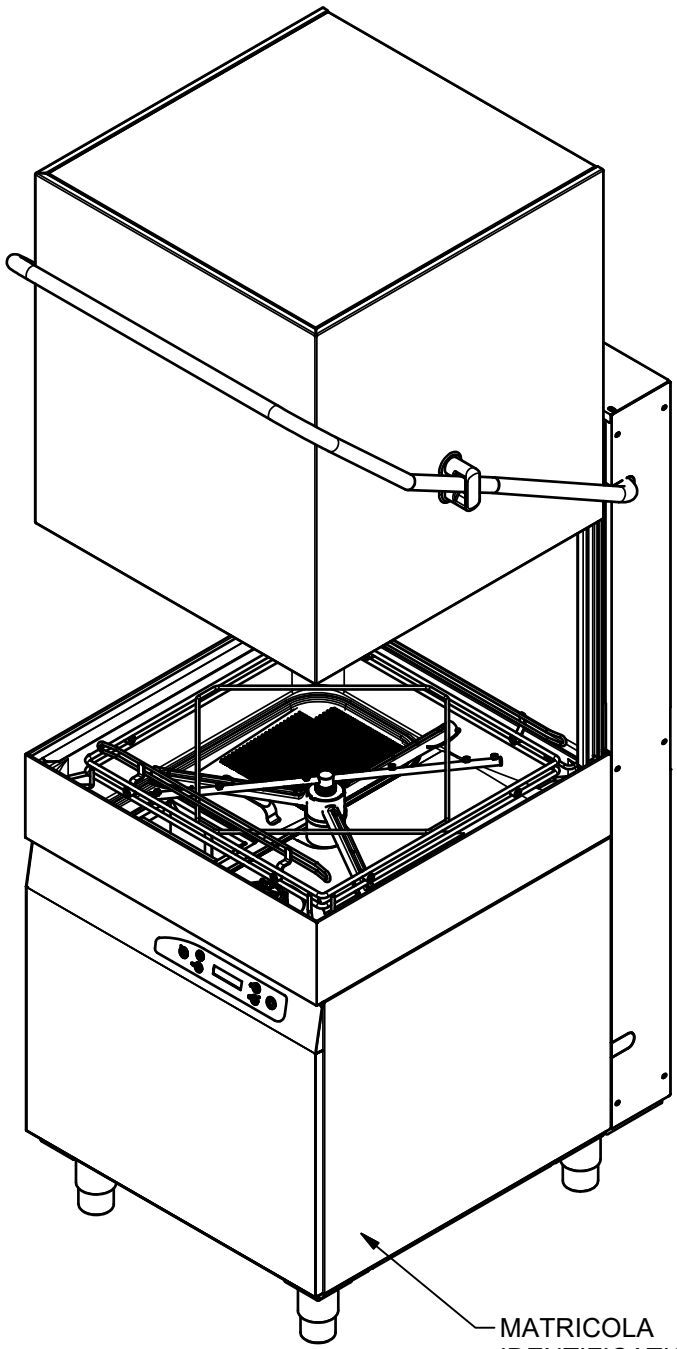

TAV 1	CARROZZERIA	BODY	CARROSSERIE
TAV 2	COMPONENTI ELETTRICI	ELECTRICAL COMPONENTS	COMPOSANTS ÉLECTRIQUES
TAV 3	COMPONENTI IDRAULICI	HYDRAULIC COMPONENTS	COMPOSANT HYDRAULIQUES
TAV 4	BRACCI LAVAGGIO / RISCIACQUO	WASH/RINSE ARMS	BRAS DE LAVAGE ET RINÇAGE
TAV 5	POMPA DI SCARICO	DRAIN PUMP	POMPE DE VIDANGE
TAV 6	ADDOLCITORE	WATER SOFTNER	ADOUCESSEUR
TAV 7	PANNELLO DI CONTROLLO	FRONT PANEL	PANNEAU DE CONTROLE
TAV 8	POMPA DI LAVAGGIO	WASHING PUMP	POMPE DE LAVAGE
TAV 9	DOSATORE DETERSIVO E BRILLANTANTE	DETERGENT AND RINSE AID DISPENSER	DOSEURS PRODUIT DE LAVAGE ET RINÇAGE

REV.00 (08/2020)	HK 1500E CARROZZERIA - BODY - CARROSSERIE	TAV.1_1

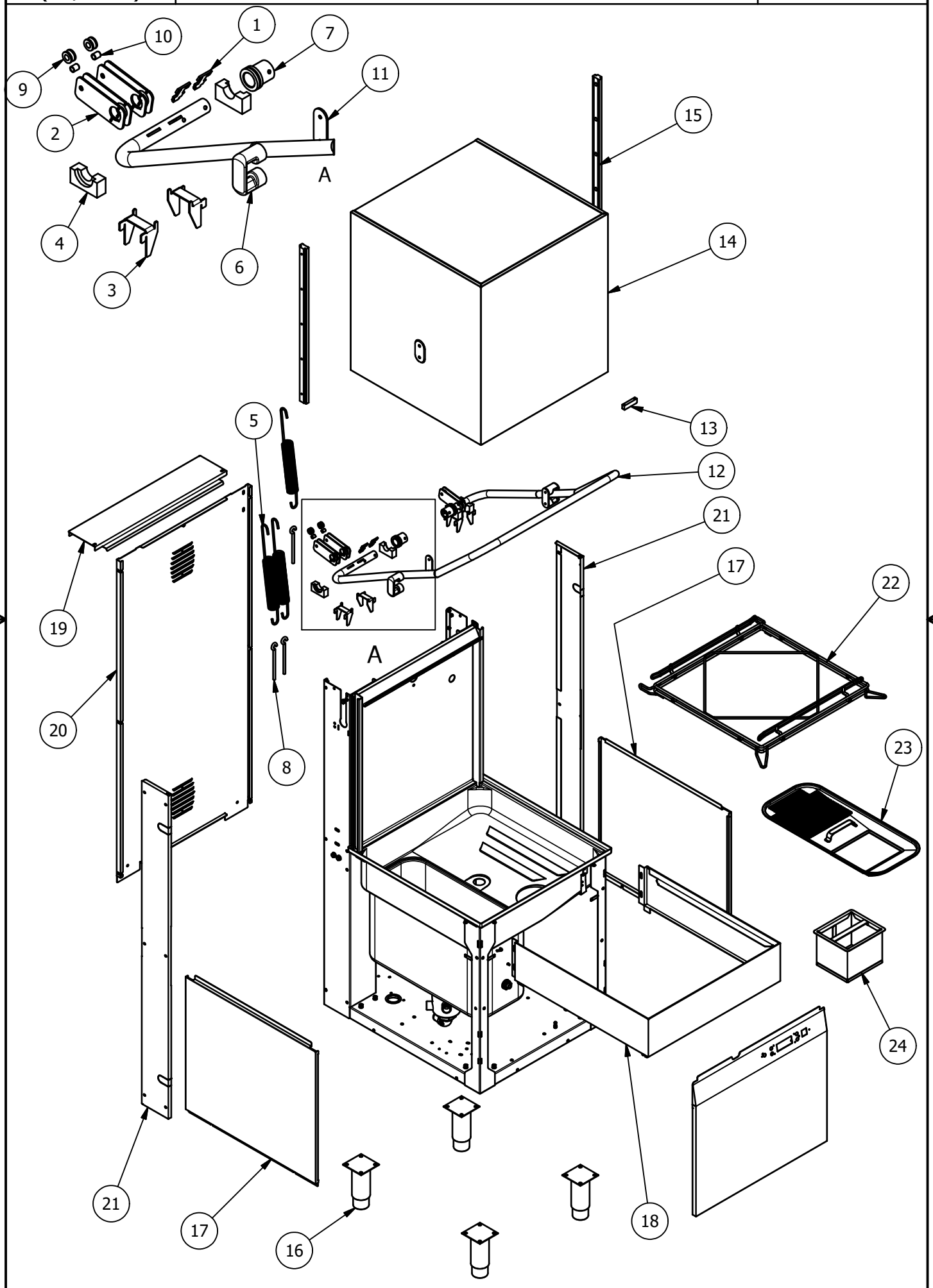

ELEM.	CODICE	DA/FROM MATR.	DESCRIZIONE	DESCRIPTION [EN]	DESCRIPTION [FR]	U.M.
1	3056-0038		PROFILO BLOCCA PIASTRA MOLLE	SPRING PLATE LOCK	ARRET DE RESSORT	No.
2	3051-0031		PIASTRA FISSAGGIO MOLLE	SPRING PLATE	ASSIETTE DU RESSORT	No.
3	3002-0054		SUPPORTO FISSAGGIO MANIGLIONE	HANDLE FIXING PLATE	PLAQUE DE FIXATION DE LA POIGNÉE	No.
4	00014390		SUPPORTO MANIGLIONE	HANDLE SUPPORT	SUPPORT DE POIGNÉE	No.
5	00002543		MOLLA A TRAZIONE (*)	TRACTION SPRING (*)	RESSORT DE TRACTION (*)	No.
6	00014789		GUIDA SCORRIMENTO MANIGLIONE	GUIDE FOR HOOD LIFT HANDLE	GUIDE POUR POIGNÉE DE LEVAGE DU CAPOT	No.
7	00014616		BOCCOLA PER TUBO MANIGLIONE	BUSHING FOR HOOD LIFT HANDLE	BAGUE POUR POIGNÉE DE LEVAGE DU CAPOT	No.
8	00006558		GANCIO M8x120	HOOK M8x120	CROCHET M8x120	No.
9	00002576		RULLINO PER MOLLA	SPRING ROLLER	ROULEAU DE RESSORT	No.
10	00002574		BUSSOLA PER RULLINO	SLEEVE BEARING	ROULEMENT À MANCHON	No.
11	3051-0032		PIASTRA INTERNA	INTERNAL PLATE	PLAQUE INTERNE	No.
12	00016878		MANIGLIONE	HOOD LIFT HANDLE	POIGNÉE DE LEVAGE DU CAPOT	No.
13	00016006		UNITA' MAGNETICA (*)	MAGNETIC UNIT (*)	UNITÉ MAGNÉTIQUE (*)	No.
14	8302-0019		CAPPOTTINA SALDATA SINGOLA PARETE	SINGLE SKINNED HOOD ASSY	CAPOT ASSY UNIQUE PEAU	No.
14A	8302-0020		CAPPOTTINA SALDATA DOPPIA PARETE (OPT)	DOUBLE SKINNED HOOD ASSY (OPT)	CAPOT ASSY DOUBLE PEAU (OPT)	No.
15	00014398		GUIDA SCORRIMENTO	RAIL GUIDE	GUIDE DE RAIL DE CAPOT	No.
16	00012041		PIEDINO FLANGIATO	ADJUSTABLE FEET	PIEDS RÉGLABLES	No.
17	3011-0005		PANNELLO LATERALE DX-SX	SIDE PANEL RH-LH	PANNEAU LATÉRAL DR-GAU	No.
18	3009-0001		FASCIA COPRI BORDO ALTA	TANK COVER BAND	BANDE DE COUVERCLE DE RÉSERVOIR	No.
19	3012-0008		SCHIENALE SUPERIORE	UPPER PANEL	PANNEAU SUPÉRIEUR	No.
20	3012-0007		SCHIENALE INTERO	REAR PANEL	PANNEAU ARRIÈRE	No.
21	3011-0006		PANN. COPRI LONGHERONE DX-SX	ROOF PANEL RH-LH	PANNEAU DE TOIT DR-GAU	No.
22	00015360		ASS. PORTACESTO	BASKET FRAME ASSY	CADRE DE PANIER ASSY	No.
23	00014480		FILTRO VASCA	TANK FILTER	FILTRE DE RÉSERVOIR	No.
24	00014498		FILTRO VASCA	TANK FILTER	FILTRE DE RÉSERVOIR	No.

(*) RICAMBI CONSIGLIATI / RECOMMENDED SPARE PARTS / PIECES DETACHEES RECOMMANDEES

REV.00 (08/2020)	HK 1500E COMPONENTI ELETTRICI - ELECTRICAL COMPONENTS - COMPOSANT ELECTRIQUES	TAV.2_1

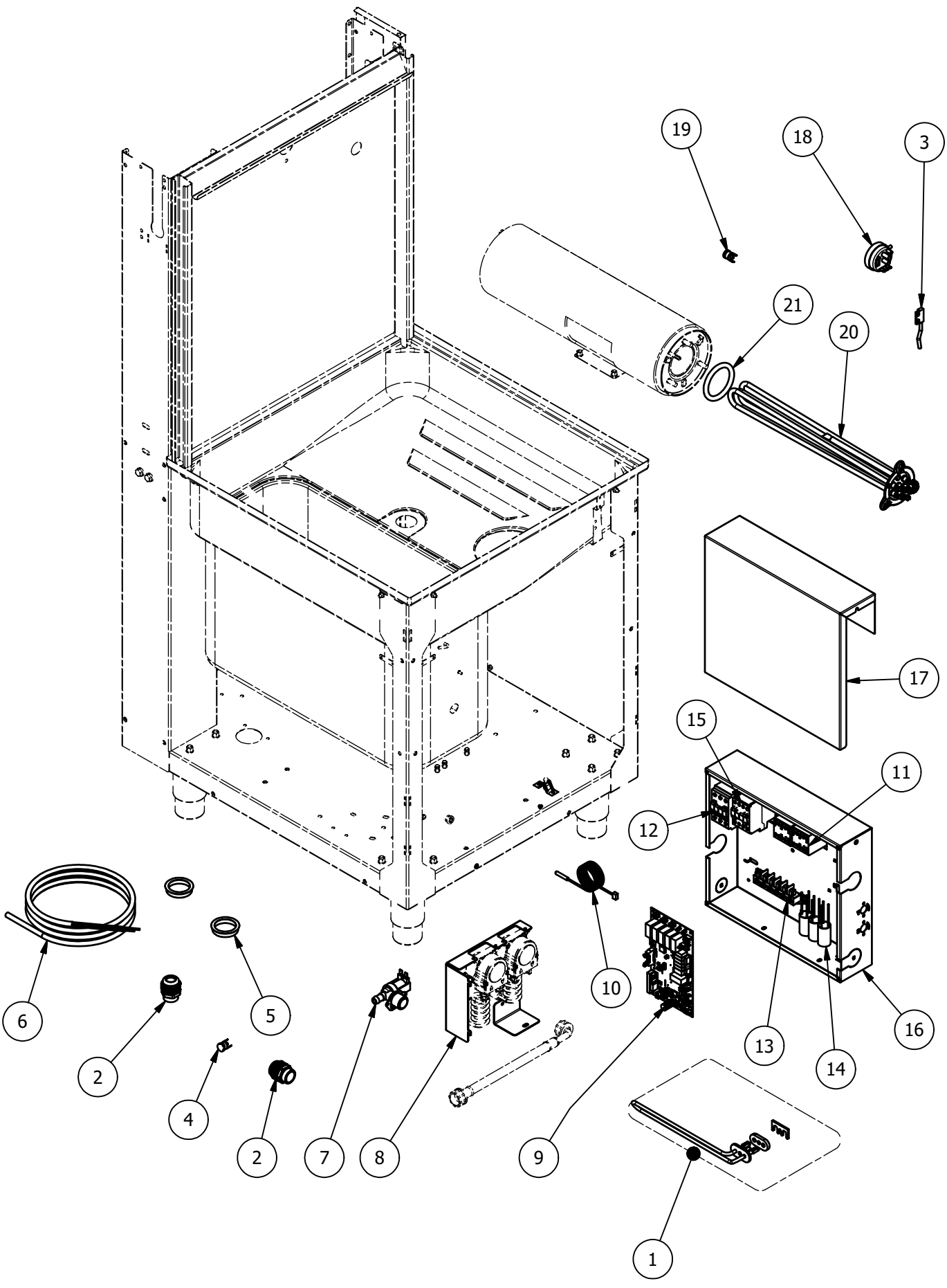

ELEM.	CODICE	DA/FROM MATR.	DESCRIZIONE	DESCRIPTION [EN]	DESCRIPTION [FR]	U.M.
1	00015608		RESISTENZA 230V 1.5kW (*)	RESISTANCE 230V 1.5kW (*)	RÉSISTANCE 230V 1.5kW (*)	No.
2	00000462		FISSACAVO PG 21	PG 21 CABLE CLAMP	GUIDE DU CABLE PG 21	No.
3	00012685		MICROINTERRUTTORE MAGNETICO (*)	MICRO SWITCH (*)	CAPTEUR MAGNETIQUE OUV. DE PORTE (*)	No.
4	00004066		TERMOSTATO BIMETALL. A R.M. (*)	MANUAL RESET SAFETY THERMOSTAT (*)	THERMOSTAT DE SECURITÉ À RÉARM. MANUEL (*)	No.
5	00014489		PASSACAVO	CABLE GUIDE	GUIDE DU CABLE	No.
6	00002776		CAVO ALIMENTAZIONE 5G 3.5	POWER CABLE 5G 3.5	CABLE D□ALIMENTATION 5G 3.5	No.
7	00000394		ELETTROVALV. SING. 90° 230V (*)	SINGLE SOLEN. VALVE 90° 230V (*)	ELECTROV. UNIQUE 90° 230V (*)	No.
8	00014349		SUPPORTO DOSATORI	DETERGENT DISPENSER SUPPORT	DOSEUR SOUTIEN	No.
9	4030-0002		SCHEDA ELETTRONICA 12 RELE' (*)	12 RELAYS ELECTRONIC CARDBOARD (*)	CARTE ÉLECTRONIQUE 12 RELAIS (*)	No.
10	4011-0002		SONDA NTC AMP MODU II PER BOILER/VASCA (*)	NTC PROBE AMP MODU II FOR BOILER/TANK (*)	SONDE NTC AMP MODU II POUR CHAUDIÈRE/RÉSERVOIR (*)	No.
11	00005140		TELERUTTORE 230V 50□60Hz (*)	CONTACTOR 230V 50□60Hz (*)	TELERUPETUR 230V 50□60Hz (*)	No.
12	4016-0001		TELERUTTORE BF26 230 45	CONTACTOR BF26 230 45	TELERUPETUR BF26 230 45	No.
13	4055-0001		MORSETTIERA FV122 40A 450V	TERMINAL BOARD FV122 40A 450V	BLOC TERMINAL FV122 40A 450V	No.
14	00002779		FILTRO ANTIDISTURBO 0,47 uF	FILTER 0,47 uF	FILTRE ANTIPARASITE 0.47 uF	No.
15	00004375		TELERUTTORE 230V 50Hz BF09 4.2kW	CONTACTOR 230V 50Hz BF09 4.2kW	TELERUPETUR 230V 50Hz BF09 4.2kW	No.
16	3024-0001		SCATOLA QUADRO ELETTRICO	WIRING METAL BOX	BOÎTE ÉLECTRIQUE	No.
17	3022-0004		PANNELLO CHIUSURA SCATOLA ELETTRICA	WIRING METAL BOX COVER	COUVERTURE BOÎTE ÉLECTRIQUE	No.
18	00015317		PRESSOSTATO LIVELLO 70/180 (*)	PRESSURE SWITCH 70/180 (*)	PRESSOSTAT DE NIVEAU D'EAU 70/180 (*)	No.
19	00004913		TERMOSTATO BIMETALL. A R.M. (*)	MANUAL RESET SAFETY THERMOSTAT (*)	THERMOSTAT DE SECURITÉ À RÉARM. MANUEL (*)	No.
20	00014802		RESISTENZA 230V 9kW	RESISTANCE 230V 9kW	RÉSISTANCE 230V 9kW	No.
21	00000057		OR PER FLANGIA BOILER (*)	OR FOR BOILER FLANGE (*)	OR POUR BRIDE DU CHAUD. (*)	No.

(*) RICAMBI CONSIGLIATI / RECOMMENDED SPARE PARTS / PIECES DETACHEES RECOMMANDEES

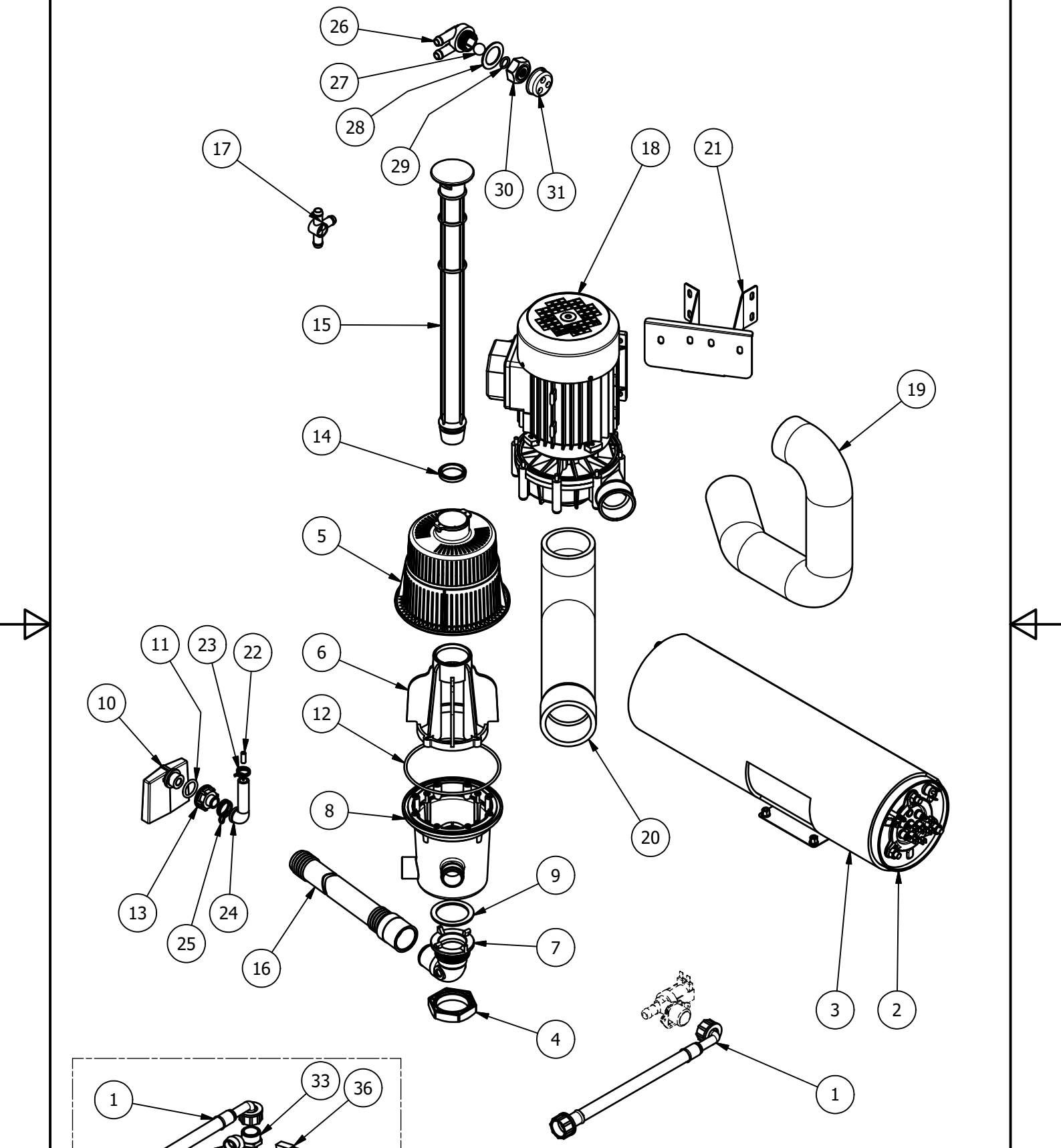

OPTIONAL:

KIT POMPA AUMENTO PRESSIONE - cod. 00005819
KIT BOOSTER PUMP - cod. 00005819
KIT POMPE AUGMENTATION PRESSION - cod. 00005819

REV.00 (08/2020)	HK 1500E COMPONENTI IDRAULICI - HYDRAULIC COMPONENTS - COMPOSANT HYDRAULIQUES	TAV.3_2

ELEM.	CODICE	DA/FROM MATR.	DESCRIZIONE	DESCRIPTION [EN]	DESCRIPTION [FR]	U.M.
1	00000139		TUBO CARICO L=2000mm	WATER INLET HOSE L=2000mm	WATER INLET HOSE L=2000mm	No.
2	8309-0001		ASS. BOILER 8L	8L BOILER ASSY	8L BOILER ASSY	No.
3	00015380		COIBENTAZIONE BOILER	BOILER INSULATION BAND	ISOLATION DE LA CHAUDIÈRE	No.
4	00000203		DADO PILETTA	DRAIN SCREW	ÉCROU TASSE D'ÉCHAPP.	No.
5	00017156		FILTRO GRUPPO FILTR.	FILTER OF FILT. GROUP	FILTRE CUVE	No.
6	00017157		GHIERA GRUPPO FILTR.	THREADED RING	BAGUE POUR FILTRE	No.
7	00017159		PILETTA DI SCARICO	DRAIN	TASSE D□ÉCHAPPEMENT	No.
8	00017158		POZZETTO SCARICO	EXHAUST COCKPIT	PUITS DU FILTRE	No.
9	00000204		GUARNIZIONE POZZETTO	EXHAUST COCKPIT GASKET	JOINT DU PUITS DU FILTRE	No.
10	00003535		GABBIA D'ARIA VASCA (*)	AIR TRAP (*)	TRAPPE D'AIR (*)	No.
11	00002934		OR 4081	OR 4081	OR 4081	No.
12	00015315		OR 4500	OR 4500	OR 4500	No.
13	00003536		DADO GABBIA D□ARIA	NUT FOR AIR TRAP	ÉCROU POUR TR. DE L'AIR	No.
14	000017178		GUARNIZIONE TROPPOPIENO	OVERFLOW GASKET	JOINT DU TROP PLEIN	No.
15	00017161		TROPPOPIENO VASCA	OVERFLOW	TROP PLEIN EN PLASTIQUE	No.
16	0002188		TUBO SCARICO L=2000mm	WATER OUTLET HOSE L=2000mm	TUYAU D'ENTRÉE L=2000mm	No.
17	00004120		DISTRIBUTORE 3 VIE	THREE□WAY DISTRIBUTOR	DISTRIBUTEUR TROIS VOIES	No.
18	00015514		POMPA LAV. 230V 50Hz 1.3kW	W. PUMP 230V 50Hz 1.3kW	POMPE DE LAV. 230V 50Hz 1.3kW	No.
18A	00016657		POMPA LAV. 230V 60Hz 1.3kW	W. PUMP 230V 60Hz 1.3kW	POMPE DE LAV. 230V 60Hz 1.3kW	No.
19	00015204		MANICOTTO MANDATA POMPA	INLET PUMP HOSE	TUYAU D'ENTRÉE A LA POMPE	No.
20	00015201		MANICOTTO ASPIRAZIONE POMPA	OUTLET PUMP HOSE	TUYAU DU SORTIE DA LA POMPE	No.
21	00015199		SUPP. POMPA LAVAGGIO	WASHING PUMP SUPP.	SUPP. DU LA POMPE	No.
22	00002933		TUBO TENUTA GABBIA D'ARIA	AIR TRAP JUNCTION	JONC. POUR TRAPPE D'AIR	No.
23	00000388		FASCETTA BIFIL. Ø14.4X15.1	CLAMP Ø14.4X15.1	COLLIER Ø14.4X15.1	No.
24	00002927		RACCORDO ANTICONDENSA	FITTING	RACCORD ANTI-COND.	No.
25	00000391		FASCETTA BIFIL. Ø19.6x20.6	CLAMP Ø19.6x20.6	COLLIER Ø19.6x20.6	No.
26	00002802		CORPO VALVOLA ANTIRIF.	NO RETURN VALVE BODY	CORPS VANNE ANTI REFLUX	No.
27	00000144		SFERA 5/8" PTFE (*)	SPHERE 5/8" PTFE (*)	BALLE 5/8" PTFE (*)	No.
28	00003086		GUARNIZIONE GOMMA	RUBBER GASKET	JOINT	No.
29	00000123		OR 115	OR 115	OR 115	No.
30	00002803		GHIERA VALVOLA ANTIRIF.	NO RETURN VALVE RING NUT	ECROU CLAPET ANTI□□RETOUR	No.
31	00016213		COP. VALVOLA ANTIRIF.	COVER NO RETURN VALVE	COUV. CLAPET ANTI□□RETOUR	No.
32	00004316		CURVA 90°	90° BEND	COURBE 90°	No.
33	2015-0001		RACC. RIDUZIONE 3/4 M 3/8 M	REDUC. 3/4 M 3/8 M	REDUC. 3/4 M 3/8 M	No.
34	00001387		RACCORDO	FITTING	RÉDUCTION	No.
35	00000380		POMPA AUM. PRESS. 230V 50Hz	BOOSTER PUMP 230V 50Hz	POMPE AUGM. PRESS. 230V 50Hz	No.
35A	00004951		POMPA AUM. PRESS. 230V 60Hz	BOOSTER PUMP 230V 60Hz	POMPE AUGM. PRESS. 230V 60Hz	No.
36	00005314		CAVO POMPA SUPPLEMENTARE	BOOSTER PUMP WIRING	CABLAGE POMPE AUGM. PRESS	No.

(*) RICAMBI CONSIGLIATI / RECOMMENDED SPARE PARTS / PIECES DETACHEES RECOMMANDEES

REV.00 (08/2020)	HK 1500E BRACCI DI LAVAGGIO/RISCIACQUO - WAS/RINSE ARMS - BRAS DE LAVAGE/RINCAGE	TAV.4_1

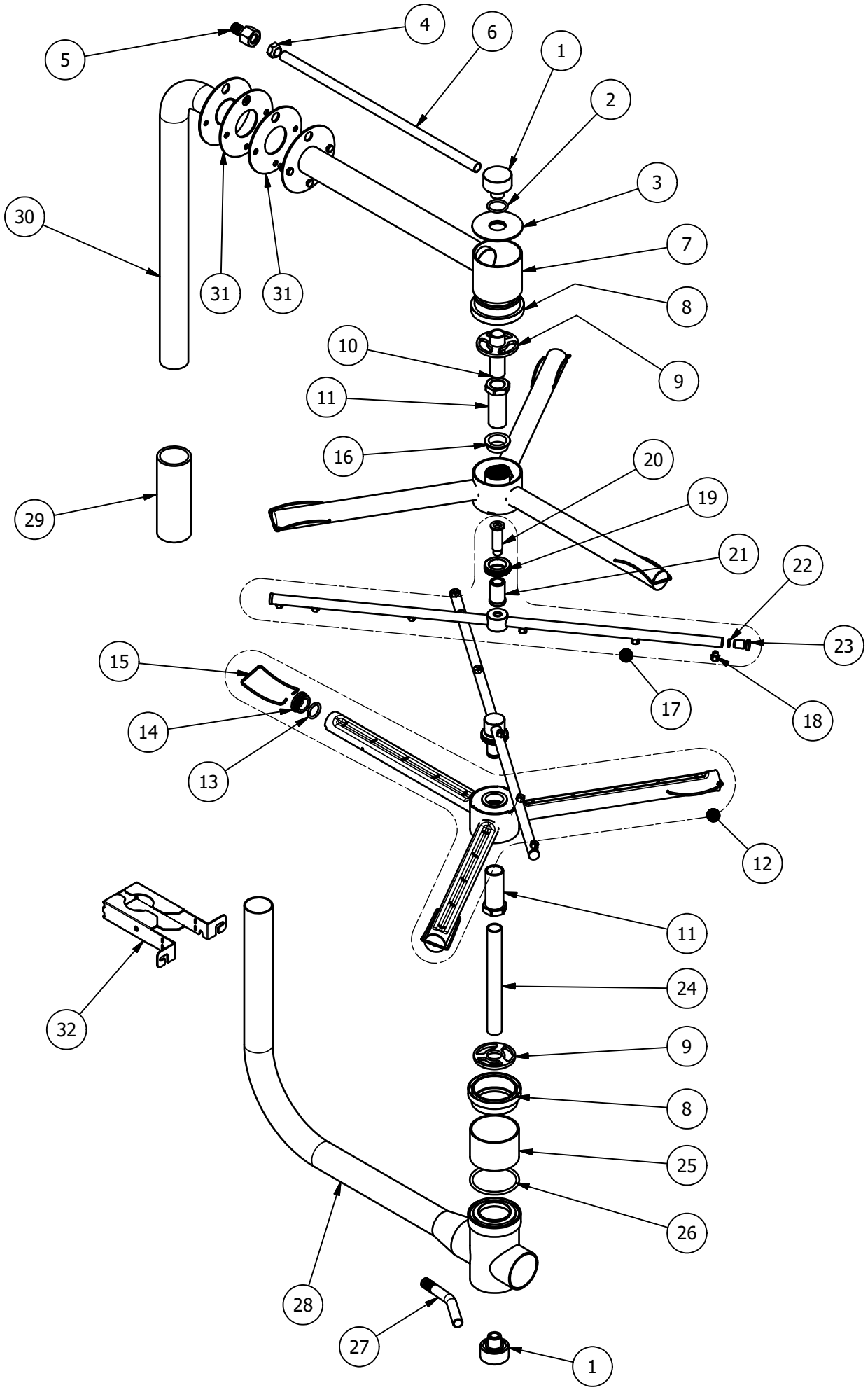

ELEM.	CODICE	DA/FROM MATR.	DESCRIZIONE	DESCRIPTION [EN]	DESCRIPTION [FR]	U.M.
1	00006590		RACCORDO A 90°	90° ELBOW	RACCORD 90°	No.
2	00000025		OR128	OR128	OR128	No.
3	8380-0010		ASS. DISCO RAMPA SUPERIORE	DISC ASSY OF SUP. WASHING PIPE	ENS. DISC DU TUYAU DE LAVAGE SUP.	No.
4	00003265		DADO M12X1	NUT M12x1	ÉCROU M12x1	No.
5	00011992		RACCORDO PER TIRANTE INOX	SS TENSIONER CONNECTION	RACCORD EN INOX POUR TIRANT	No.
6	00010952		TUBO RISCIACQUO SUP.	UPPER RINSE PIPE	TUYAU SUP. DU RINCAGE	No.
7	8305-0001		ASSIEME RAMPA LAVAGGIO	WASHING PIPE ASSY	ENS. DE TUBES DE LAVAGE	No.
8	00017510		FLANGIA INT. COPRITIRANTE	INTERNAL FLANGE	BRIDE INTERNE	No.
9	00017541		FLANGIA INT. COPRITIRANTE	INTERNAL FLANGE	BRIDE INTERNE	No.
10	00011088		TIRANTE SUPERIORE	UPPER TENSIONER	TENDEUR SUPÉRIEUR	No.
11	00002587		PERNO DI LAVAGGIO	WASH PIN	PIN DE LAVAGE	No.
12	00015521		ASS. GIRANTE LAVAGGIO	WASHING ARM	BRAS DE LAVAGE	No.
13	00000093		OR121	OR121	OR121	No.
14	00002650		TAPPO TUBI LAVAGGIO (*)	WASHING ARM CAP (*)	BOUCH. BRAS DE LAVAGE (*)	No.
15	00002654		MOLLA AD ARCHETTO	SPRING	RESSORT	No.
16	00002445		BUSSOLA IN TEFLON (*)	TEFLON PLAN BEARINGS (*)	ROULEMENTS PLAN TEFLON (*)	No.
17	0002761C		ASS. GIRANTE RISCIACQUO	RINSE ARM	BRAS DE RINCAGE	No.
18	00017155		UGELLO RISCIACQUO INOX	RINSE NOZZLE	GICLEUR RINCAGE	No.
19	00002416		GHIERA INOX	SS RING NUT	ECROU EN INOX	No.
20	00002417		PERNO INOX	SS PIN	PIN EN INOX	No.
21	00002419		BUSSOLA IN TEFLON	TEFLON PLAN BEARINGS	ROULEMENTS PLAN TEFLON	No.
22	00002531		OR 106	OR 106	OR 106	No.
23	00002502		TAPPO RISCIACQUO (*)	RINSE ARM PLUG (*)	BOUCHON BRAS DE RINCAGE (*)	No.
24	00014578		TIRANTE INFERIORE	LOWER TENSIONER	TENDEUR INFÉRIEUR	No.
25	00017509		FODERO COPRITIR. INFERIORE	LOWER TENSIONER COVER	COUVERTURE DU TENDEUR INFÉRIEUR	No.
26	00006546		OR158	OR158	OR158	No.
27	00008648		RACCORDO INOX M12x1	M12x1 SS FITTING	RACCORD M12x1 INOX	No.
28	00014357		ASS. RAMPA INFERIORE LAVAGGIO	LOWER WASHING PIPE ASSY	TUYAU DE LAVAGE INFÉRIEUR	No.
29	00002731		TUBO RADIOR d42x115	d42x115 RADIOR PIPE	TUYAU RADIOR d42x115	No.
30	00010953		ASS. RAMPA SUPERIORE LAVAGGIO	UPPER WASHING PIPE ASSY	TUYAU DE LAVAGE SUPÉRIEUR	No.
31	00010955		GUARNIZIONE GOMMA FLANGIA	GASKET FOR WASHING FLANGE	JOINT POUR BRIDE DE LAVAGE	No.
32	00015381		SUPP. RAMPA LAVAGGIO	WASHING PIPE SUPPORT	SUPP. TUBES DE LAVAGE	No.

(*) RICAMBI CONSIGLIATI / RECOMMENDED SPARE PARTS / PIECES DETACHEES RECOMMANDEES

REV.00 (08/2020)	HK 1500E KIT POMPA DI SCARICO - KIT DRAIN PUMP - KIT POMPE DE VINDAGE	TAV.5_1

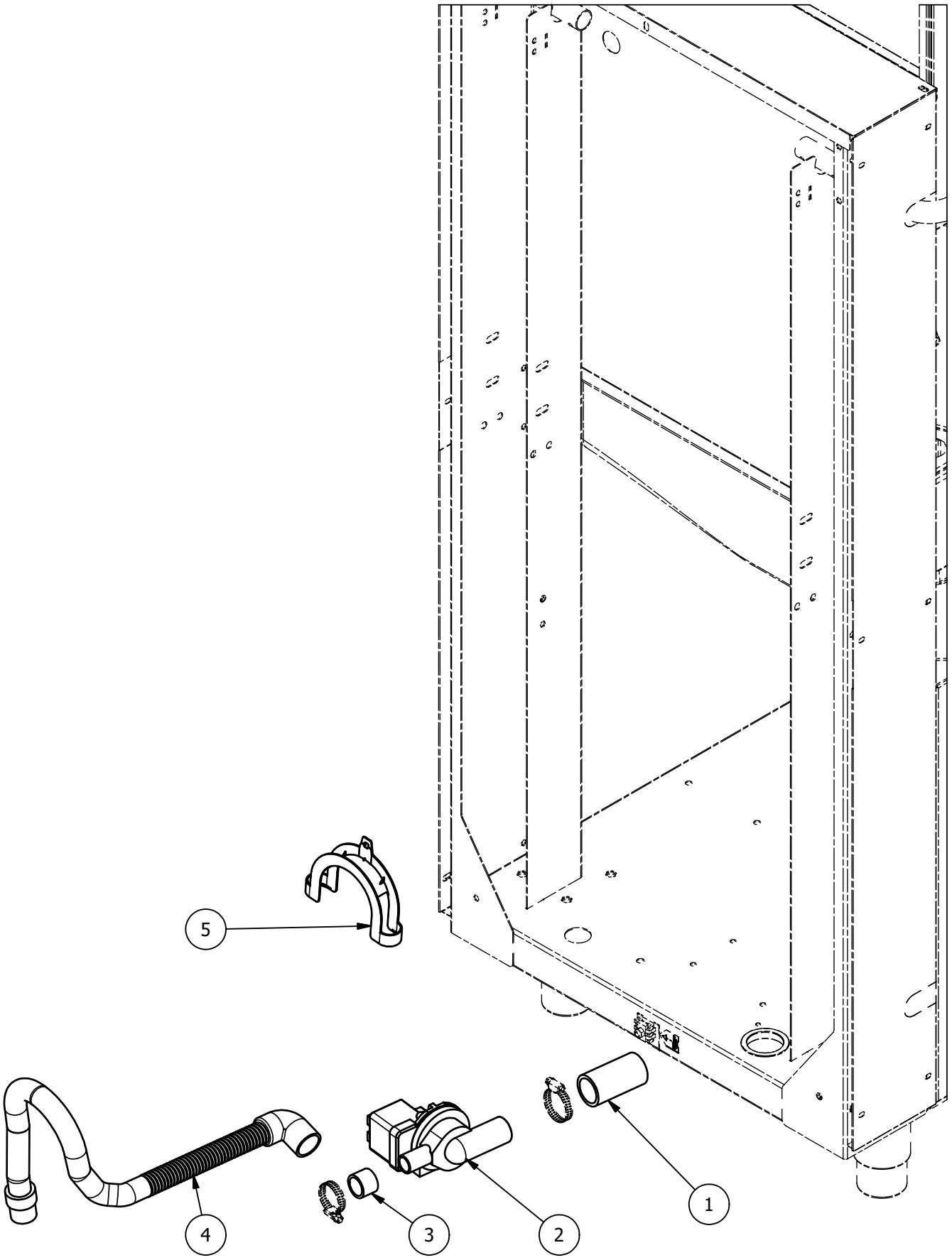

KIT POMPA DI SCARICO COMPLETO - COMPLETE DRAIN PUMP KIT - KIT POMPE DE VIDANGE COMPLET: 16719

REV.00 (08/2020)	HK 1500E KIT POMPA DI SCARICO - KIT DRAIN PUMP - KIT POMPE DE VINDAGE	TAV.5_2

ELEM.	CODICE	DA/FROM MATR.	DESCRIZIONE	DESCRIPTION [EN]	DESCRIPTION [FR]	U.M.
1	00001221		MANICOTTO	HOSE	TUYAU	No.
2	00000379		POMPA DI SVUOTAMENTO 230V 50Hz (*)	DRAIN PUMP 230V 50Hz (*)	POMPE DE VIDANGE 230V 50Hz (*)	No.
2A	6006-0002		POMPA DI SVUOTAMENTO 230V 60Hz (*)	DRAIN PUMP 230V 60Hz (*)	POMPE DE VIDANGE 230V 60Hz (*)	No.
3	3040-0002		TUBO EPDM	EPDM HOSE	TUYAU EN EPDM	No.
4	0271500002		TUBO SCARICO L= 2500 mm	DRAIN HOSE L= 2500 mm	TUYAU D□ÉCHAPPEMENT L= 2500 mm	No.
5	00016395		CURVA SUPPORTO TUBO SCARICO	DRAIN HOSE SUPPORT	SUPPORT DU TUYAU D□ÉCHAPPEMENT	No.

(*) RICAMBI CONSIGLIATI / RECOMMENDED SPARE PARTS / PIECES DETACHEES RECOMMANDEES

REV.00 (08/2020)	HK 1500E ADDOLCITORE - WATER SOFTNER - ADOUCISSEUR	TAV.6_1

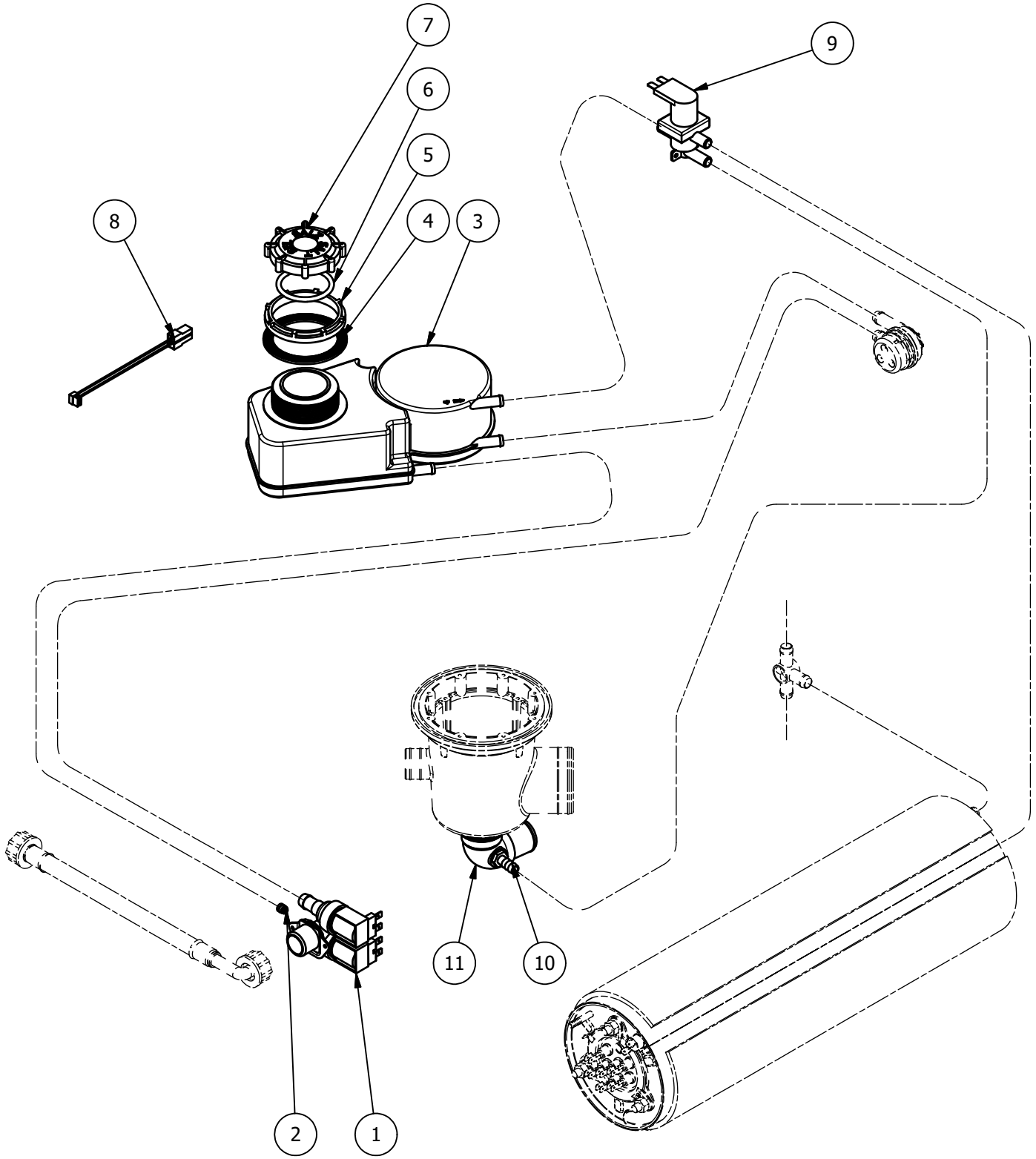

REV.00 (08/2020)	HK 1500E ADDOLCITORE - WATER SOFTNER - ADOUCISSEUR	TAV.6_2

ELEM.	CODICE	DA/FROM MATR.	DESCRIZIONE	DESCRIPTION [EN]	DESCRIPTION [FR]	U.M.
1	2017-0001		ELETTROVALVOLA DOPPIA 90° 230V 50/60 Hz (*)	SOLENOID VALVE 90° 230V 50/60 Hz (*)	ELECTROVANNE 90° 230V 50/60 Hz (*)	No.
2	00006524		RIDUTTORE DI PORTATAUSCITA 0.5 L/MIN	FLOW REDUCER 0.5 L/MIN	RÉDUCTEUR DE DÉBIT 0.5 L/MIN	No.
3	00017209		ASS. ADDOLCITORE AUTOMATICO	AUTOM. WATER SOFTNER ASSY	ENS. DU L'ADOUCISSEUR	No.
4	00006152		GUARNIZIONE	GASKET	JOINT	No.
5	2019-0001		GHIERA ADDOLCITORE	THREADED RING OF WATER SOFTNER	BAGUE POUR L'ADOUCISSEUR	No.
6	2060-0004		OR TAPPO ADDOLCITORE	CAP OR	OR DU CAP	No.
7	2006-0001		TAPPO ADDOLCITORE	WATER SOFTNER CAP	CAP DU L'ADOUCISSEUR	No.
8	4040-0003		CAVO COLLEGAMENTO ADDOLCITORE AUTOMATICO	WATER SOFTNER CONNECTION CABLE	CÂBLAGE DU L'ADOUCISSEUR	No.
9	00015785		ELETTROV. DOPPIA USCITA (*)	SOLENOID VALVE DOBLE EXIT (*)	ÉLECTROVANNE À DOUBLE SORTIE (*)	No.
10	00017298		PORTAGOMMA INOX 1/4"	SS FITTING 1/4"	RACCORD INOX 1/4"	No.
11	00017299		PILETTA DI SCARICO	DRAIN CUP	TASSE D□ÉCHAPPEMENT	No.

(*) RICAMBI CONSIGLIATI / RECOMMENDED SPARE PARTS / PIECES DETACHEES RECOMMANDEES

REV.00 (08/2020)	HK 1500E PANNELLO COMANDI - FRONT PANEL - PANNEAU DE CONTROLE	TAV.7_1

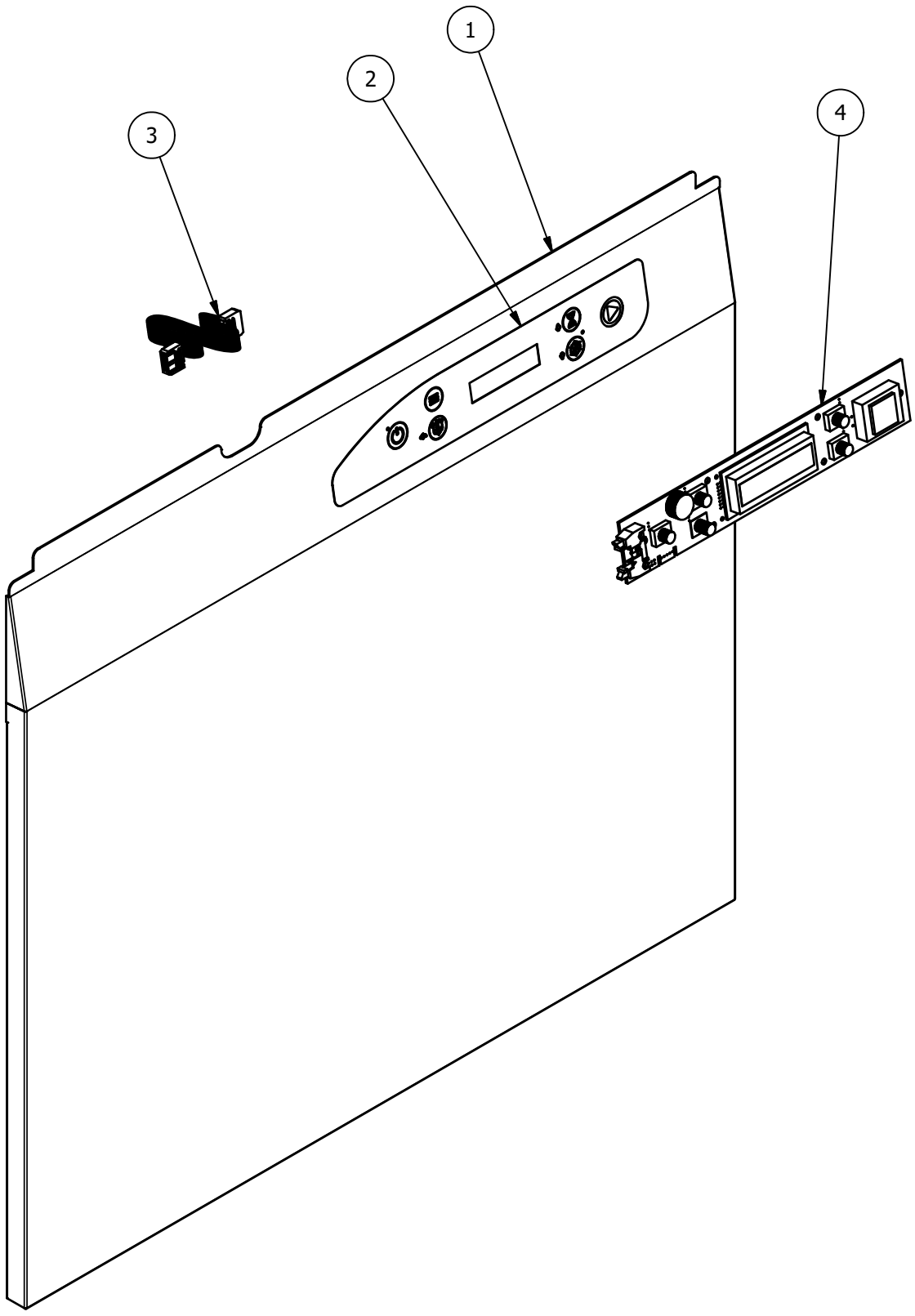

REV.00 (08/2020)	HK 1500E PANNELLO COMANDI - FRONT PANEL - PANNEAU DE CONTROLE	TAV.7_2

ELEM.	CODICE	DA/FROM MATR.	DESCRIZIONE	DESCRIPTION [EN]	DESCRIPTION [FR]	U.M.
1	3013-0024		PANNELLO FRONTALE	FRONT PANEL	PANNEAU AVANT	No.
2	3501-0016		MEMBRANA ADESIVA	ADHESIVE LABEL	MEMBRANE ADHÉSIVE	No.
3	4040-0001		CAVO FLAT 10 FILI (*)	10-WIRES FLAT CABLE (*)	CÂBLE PLAT À 10 FILS (*)	No.
4	4035-0001		DISPLAY 6 TASTI (*)	6KEYS DISPLAY (*)	AFFICHAGE À 6 BOUTONS (*)	No.

(*) RICAMBI CONSIGLIATI / RECOMMENDED SPARE PARTS / PIECES DETACHEES RECOMMANDEES

REV.00 (08/2020)	HK 1500E POMPA DI LAVAGGIO - WASHING PUMP - POMPE DE LAVAGE	TAV.8_1

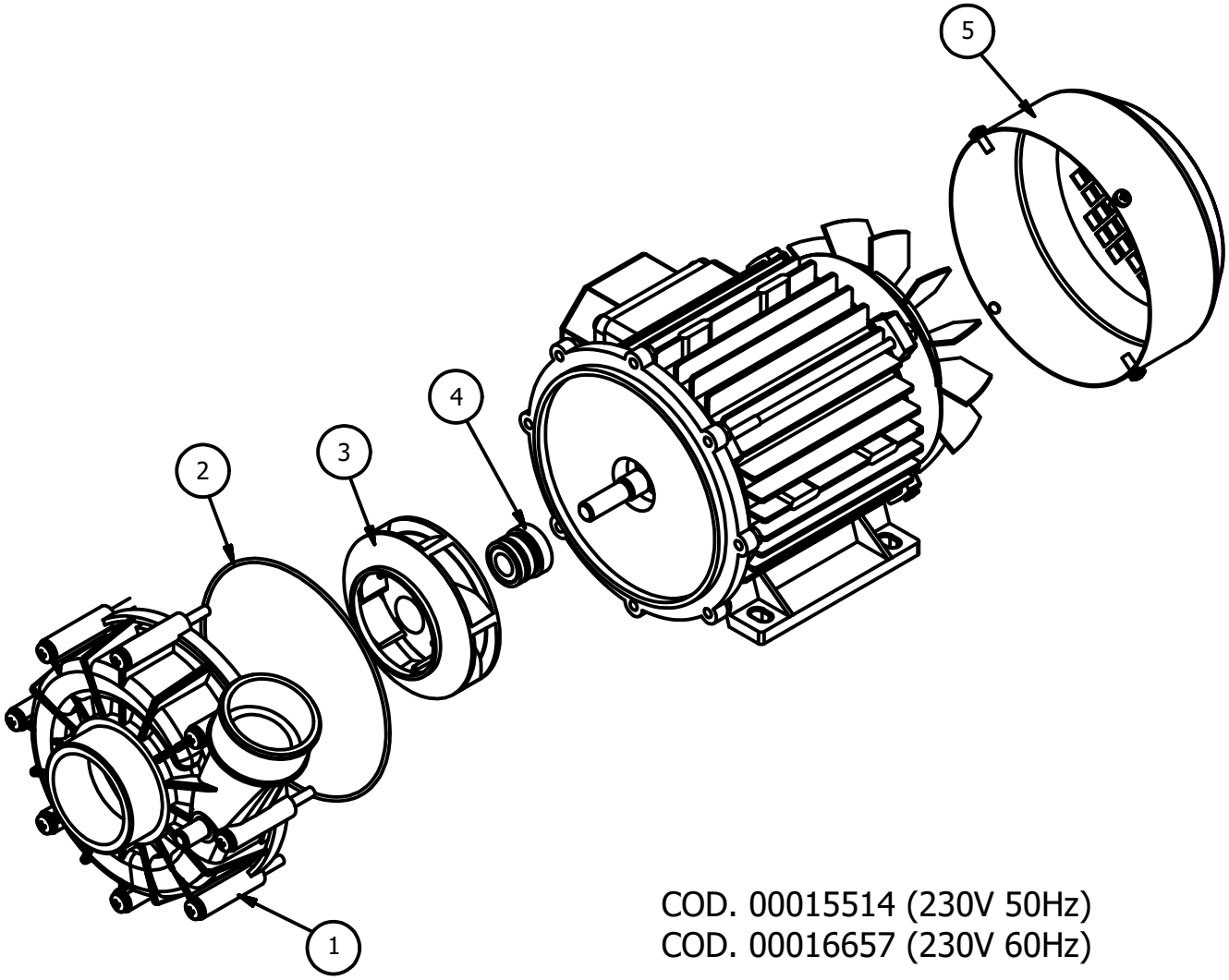

COD. 00015514 (230V 50Hz)
COD. 00016657 (230V 60Hz)

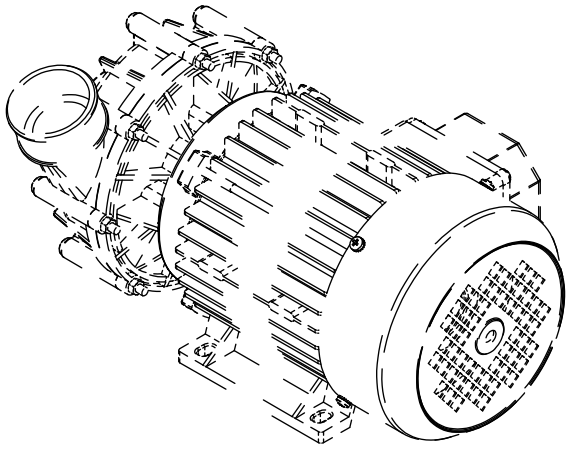

REV.00 (08/2020)	HK 1500E POMPA DI LAVAGGIO - WASHING PUMP - POMPE DE LAVAGE	TAV.8_2

ELEM.	CODICE	DA/FROM MATR.	DESCRIZIONE	DESCRIPTION [EN]	DESCRIPTION [FR]	U.M.
1	00016750		CHIOCCIOLA	PUMP CASE	CARTER POUR POMPE	No.
2	00016747		GUARNIZIONE	GASKET	JOINT	No.
3	00016751		GIRANTE	IMPELLER	ROUE	No.
4	00014564		KIT TENUTA ROTANTE	SEAL KIT	KIT D'ÉTANCHÉITÉ	No.
5	00016757		COPRIVENTOLA	FAN COVER	COUVERCLE DE VENTILATEUR	No.

(*) RICAMBI CONSIGLIATI / RECOMMENDED SPARE PARTS / PIECES DETACHEES RECOMMANDEES

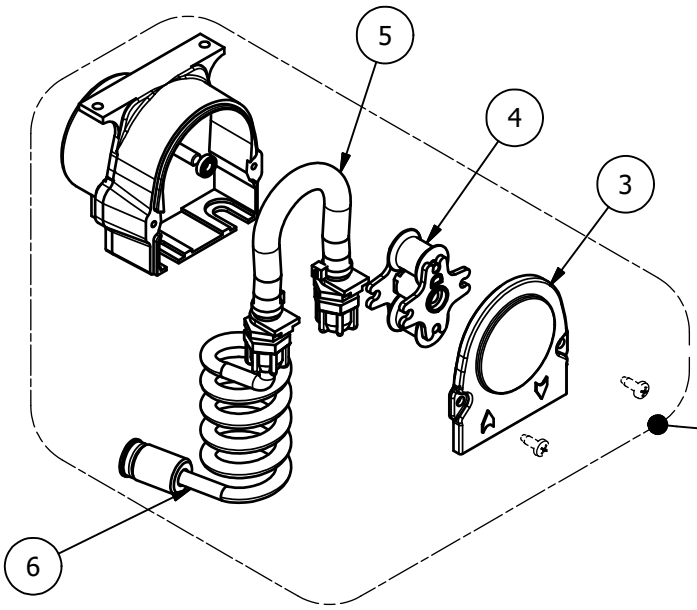

DOSATORE DETERSIVO FISSO
FIX DETERGENT DISPENSER
DOSEUR PRODUIT DE LAVAGE FIXÉ

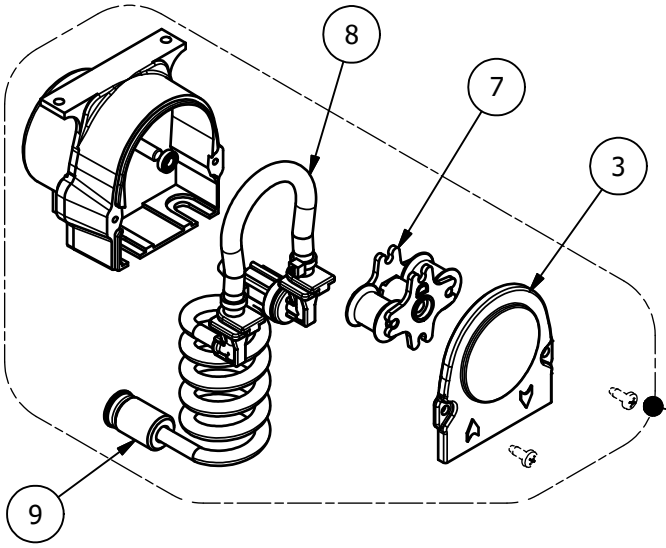

DOSATORE BRILLANTANTE FISSO
FIX RINSE-AID DISPENSER
DOSEUR PRODUIT DE RINCAGE FIXÉ

ELEM.	CODICE	DA/FROM MATR.	DESCRIZIONE	DESCRIPTION [EN]	DESCRIPTION [FR]	U.M.
1	00016182		ASS. DOS.DETER. ELETTR. FISSO 3Lt/h	FIX DETER. DISPENSER 3Lt/h	DOSEUR PRODUIT DE LAV. FIXE 3Lt/h	No.
2	8395-0011		ASS. DOS. BRILL. ELETTR. FISSO 0.5Lt/h	FIX RINSE AID DISPENSER 0.5Lt/h	DOSEUR RINCAGE FIXE 0.5Lt/h	No.
3	8395-0013		COPERCHIO DI CHIUSURA	COVER ASSY	COUVERTURE DE FERMETURE	No.
4	00006632		ASS. PORTARULLI DOS. DETERSIVO (*)	DETERGENT DISPENSER ROLL HOLDER ASSY (*)	ENSEMBLE SUPPORT DE ROULEAU DOSEUR PRODUIT DE LAV. (*)	No.
5	00017128		TUBO INTERNO DOSAT. DETERSIVO (*)	INTERNAL DETERG. DISPENSER HOSE (*)	TUBE INTERNE POUR DOSEUR PRODUIT DE LAV. (*)	No.
6	00005069		ASS. FILTRO DOSAT. DETERS. CON TUBO	DETERG. DISPENS. FILTER ASSY	ENS. DU FILTRE DU DOSEUR PRODUIT DE LAV. AVEC TUBE	No.
7	8395-0014		ASS. PORTARULLI DOS. BRILL. (*)	RINSE AID DISPENSER ROLL HOLDER ASSY (*)	ENSEMBLE SUPPORT DE ROULEAU DOSEUR RINC. (*)	No.
8	8395-0012		TUBO INTERNO DOSAT. BRILLANTANTE CON VALV. (*)	INTERNAL RINSE AID DISP. HOSE WITH VALVE (*)	TUBE INTERNE POUR DOSEUR RINC. AVEC VANNE(*)	No.
9	00005070		ASS. FILTRO DOSAT. BRILL. CON TUBO	RINSE AID DISPENS. FILTER ASSY	ENS. DU FILTRE DU DOSEUR RINCAGE AVEC TUBE	No.

(*) RICAMBI CONSIGLIATI / RECOMMENDED SPARE PARTS / PIECES DETACHEES RECOMMANDEES